*Proceedings of the Steklov Institute of Mathematics, Vol. 244, 2004, pp. 106–131.*
*Translated from Trudy Matematicheskogo Instituta imeni V.A. Steklova, Vol. 244, 2004, pp. 115–142.*
*Original Russian Text Copyright © 2004 by S.V. Gonchenko, D.V. Turaev, L.P. Shilnikov.*
*Copyright © 2004 by MAIK "Nauka/Interperiodica" (Russia).*

# Existence of Infinitely Many Elliptic Periodic Orbits in Four-Dimensional Symplectic Maps with a Homoclinic Tangency

**S. V. Gonchenko[1], D. V. Turaev[2], and L. P. Shilnikov[3]**

Received November 2001

**Abstract**—We study the problem of coexistence of a countable number of periodic orbits of different topological types (saddles, saddle–centers, and elliptic) in the case of four-dimensional symplectic diffeomorphisms with a homoclinic trajectory to a saddle–focus fixed point.

## INTRODUCTION

This paper studies symplectic diffeomorphisms and Hamiltonian systems with homoclinic tangencies. Namely, we speak about the structure of the set of orbits in a small neighborhood of a homoclinic orbit at the points of which the stable and unstable manifolds of a saddle periodic orbit have a quadratic tangency. In a sense, this paper continues the series of papers of the authors where this problem was studied in the framework of general smooth dynamical systems. It was established in [1–3] that one of the main properties of multidimensional systems with homoclinic tangencies is the *coexistence of periodic trajectories of different topological types* (i.e., with different dimensions of unstable manifolds). This includes the well-known phenomenon [4–6] of coexistence of hyperbolic sets and stable periodic orbits near homoclinic tangencies. Final criteria for the birth of stable periodic orbits at the bifurcations of a quadratic homoclinic tangency in the case of general dynamical systems were obtained in [1, 2, 7].

When studying analogous problems in the conservative case, some peculiarities and differences appear. First, usual conditions of general position often exclude the conservative case; therefore, the results obtained in the theory of general systems can rarely be applied to conservative ones. This is true for the systems with homoclinic tangencies as well. Moreover, certain technical difficulties also appear here. The problem is that the study of the behavior near a homoclinic orbit is reduced to the study of the first-return map near some homoclinic point. Usually, this map is written in the form $T = T_1 T_0^k$, where $T_0$ is the Poincaré map near the saddle periodic orbit and $T_1$ is a map defined by the orbits near the global piece of the homoclinic trajectory. Here, $k$ may take all positive integer values starting with some $\overline{k}$. Since the values of $k$ are not bounded from above, difficulties in the computation of $T_0^k$ appear. In the case of general systems, the use of smooth linearization theorems here may look as the most attractive approach. However, if such an approach can be justified in a certain sense in the case of general systems, in the conservative dynamics, one usually cannot get rid of small-order resonances whose presence makes the smooth linearization impossible. Typically, the

[1]Institute for Applied Mathematics and Cybernetics, ul. Ulyanova 10, Nizhni Novgorod, 603005 Russia.
E-mail: gosv100@uic.nnov.ru
[2]Weierstrass-Institut für Angewandte Analysis und Stochastik, Mohrenstrasse 39, D-10117, Berlin, Germany.
E-mail: turaev@wias-berlin.de
[3]Institute for Applied Mathematics and Cybernetics, ul. Ulyanova 10, Nizhni Novgorod, 603005 Russia.
E-mail: shilnikov@focus.nnov.ru

normal form of a symplectic map in a neighborhood of a saddle fixed point is essentially nonlinear. Therefore, for example, the well-known Smale theorem from [8] about the complex structure of the set of orbits in a neighborhood of a transverse homoclinic orbit could not be applied to symplectic diffeomorphisms since the conditions of the theorem included assumptions on the existence of a smooth linearization near the saddle fixed point. These problems completely disappear when one computes the iterations of the local map $T_0$ in the so-called cross-form [9, 10]. This was the approach that allowed the second author to solve the Poincaré–Birkhoff problem on the structure of the set of orbits lying near a transverse homoclinic orbit for arbitrary systems, including the Hamiltonian case [9]. On the other hand, in the case of conservative systems with homoclinic and heteroclinic tangencies, even a formal removal of the nonlinear terms in the map near a saddle fixed point may be inappropriate: these terms may essentially influence the dynamics. Thus, the study of two-dimensional symplectic maps with a nontransverse heteroclinic cycle has shown [11] that the invariants of the Birkhoff–Moser normal form enter the formulas for the $\Omega$-moduli (continuous invariants of the local $\Omega$-conjugacy).

The main goal of the present paper is finding conditions under which a symplectic diffeomorphism with a homoclinic tangency to some fixed point has an infinite set of elliptic periodic points. Here, we follow Poincaré, who raised the question of the existence of stable (elliptic) periodic orbits as one of the main questions of the classical nonlinear dynamics. We must immediately note that, among codimension-1 bifurcations of a homoclinic tangency, only two cases are interesting in this connection, a two-dimensional case and a four-dimensional case; moreover, the fixed point must be a saddle–focus in the four-dimensional case. This is associated with the fact that, in other codimension-1 cases, there exists an invariant manifold, either two- or four-dimensional, that contains the orbit of homoclinic tangency and all the orbits that stay close to it for all, backward and forward, iterations of the map [1, 7]. This manifold is saddle, which excludes the existence of elliptic points.

The case of two-dimensional symplectic diffeomorphisms with a homoclinic tangency was considered in [12, 13]. It was shown there that generically (namely, if some invariant $\tau$ is not an integer) the set of orbits that lie entirely in a small neighborhood of the homoclinic orbit has a nonuniformly hyperbolic structure; hence, it does not contain elliptic points.[4]

In the four-dimensional case, when there is an orbit of homoclinic tangency to a saddle–focus fixed point, the birth of elliptic orbits after the tangency is split was established in [18]. In the present paper, we investigate the question of the existence of an *infinite set* of elliptic periodic orbits at the moment of tangency itself. Moreover, we also consider the question of the coexistence of periodic trajectories of different topological types. It is known that periodic orbits of four-dimensional symplectic diffeomorphisms, structurally stable in the linear approximation, may be of the three following types:

1) *saddle*, for which one pair of the multipliers lies inside the unit circle and the other pair of multipliers lies outside it; among the saddle periodic orbits, one distinguishes *saddles*, whose multipliers are real, and *saddle–foci*, whose multipliers are complex (one also distinguishes three types of saddles, $(+,+)$, $(-,-)$, or $(+,-)$, for which, respectively, all the multipliers are positive, negative, or two multipliers are positive and the other two are negative);

2) *saddle–centers* (or 1-elliptic), which have one pair of real multipliers (different from 1 in the absolute value) and one pair of complex-conjugate multipliers on the unit circle (one can distinguish two types of saddle–centers: saddle–centers $(+)$ and saddle–centers $(-)$, depending on the sign of the real multipliers);

3) *elliptic* (or 2-elliptic), all of whose multipliers $\nu_1, \dots, \nu_4$ lie on the unit circle: $\nu_{1,2} = e^{\pm i\omega_1}$, $\nu_{3,4} = e^{\pm i\omega_2}$, where $0 < \omega_{1,2} < \pi$ and $\omega_1 \neq \omega_2$. In symplectic polar coordinates, the map near

[4] It is well known, however, that elliptic points indeed appear here when the homoclinic tangency is split [14, 11, 15–17].

an elliptic fixed point may be brought to the following Birkhoff normal form if there are no strong resonances (i.e., if $\omega_1 \neq \omega_2$, $\omega_1 \neq 2\omega_2$, $\omega_1 \neq 3\omega_2$, $\omega_2 \neq 2\omega_1$, $\omega_2 \neq 3\omega_1$, $\omega_1 + \omega_2 \neq \pi$, $\omega_1 + 2\omega_2 \neq 2\pi$, $2\omega_1 + \omega_2 \neq 2\pi$, $3\omega_1 \pm \omega_2 \neq 2\pi$, $3\omega_2 \pm \omega_1 \neq 2\pi$, $\omega_{1,2} \neq 2\pi/3, \pi/2$):

$$\overline{\rho} = \rho + o(\rho^2), \qquad \overline{\theta} = \theta + \omega + \Omega\rho + o(\rho), \tag{1}$$

where $\rho \in R^2$, $\theta \in T^2$, $\omega = (\omega_1, \omega_2)$, and $\Omega$ is a $2 \times 2$ matrix. When $\Omega$ is nondegenerate (i.e., $\det \Omega \neq 0$), the corresponding fixed point is called a *generic elliptic point*.

It is obvious that the periodic orbits of the first two types (saddle orbits and saddle–centers) are unstable. In the case of a generic elliptic periodic point, the KAM theory gives a definite positive answer to the question of the eternal stability only in the two-dimensional case. For the four-dimensional case, the KAM theory implies that, for the majority (in measure) of initial conditions, the trajectories never leave a neighborhood of a generic elliptic orbit. However, for the rest of initial conditions, one cannot exclude a situation when the corresponding orbits leave the neighborhood due to the so-called Arnold diffusion. Therefore, below, when speaking about the stability of elliptic points, we will have in mind the KAM stability. Of course, to use the KAM theory, one should require that the map is sufficiently smooth.

In this paper, we consider $C^r$-smooth ($r \geq 7$) symplectic diffeomorphisms with a *saddle–focus* fixed point, whose two-dimensional stable and unstable invariant manifolds have a quadratic tangency at the points of some homoclinic orbit. In the space of $C^r$-smooth symplectic maps, such diffeomorphisms fill bifurcational surfaces of codimension 1. Let $\mathcal{H}$ be such a surface.

**Main theorem.** *In $\mathcal{H}$, there exists a subset $\mathcal{H}_c$, dense (residual) in the $C^r$-topology, such that every diffeomorphism from $\mathcal{H}_c$ has*

(i) *an infinite set of generic elliptic periodic orbits,*

(ii) *an infinite set of saddle–center periodic orbits, and*

(iii) *an infinite set of saddle periodic orbits (both saddles and saddle–foci).*

The proof is based on the study of parametric families of diffeomorphisms in $\mathcal{H}$ (i.e., families for which the original homoclinic tangency is not split). It is important to note that we choose, as the parameters, $\Omega$-moduli, i.e., continuous invariants of topological conjugacy on the set of orbits lying in a small neighborhood of a homoclinic tangency. By definition, $\Omega$-moduli are natural governing parameters because any change in the value of an $\Omega$-modulus leads to a change in the structure of the set of nonwandering orbits, i.e., to bifurcations of periodic, homoclinic, etc., trajectories.

Because of the importance of the $\Omega$-moduli for the bifurcation theory in general, let us dwell on this subject. Note, first, that the existence of $\Omega$-moduli is a characteristic feature of systems with homoclinic tangencies [19–21, 1, 22]. Namely, such invariants exist in systems with a homoclinic tangency of the so-called third class [4, 23]. In the case of the first two classes, one can give a complete description of the set $N$ of trajectories lying in a small neighborhood of an orbit of homoclinic tangency [4]: here, $N$ either has a trivial structure (for systems of the first class), or admits a complete description in the language of symbolic dynamics (the second class). In the case of homoclinic tangency of the third class, the set $N$ does not generally admit a complete description, and its structure changes with any change in the values of the so-called main $\Omega$-modulus

$$\theta = -\frac{\ln|\lambda|}{\ln|\gamma|},$$

where $\lambda$ and $\gamma$ are the leading multipliers of the saddle periodic orbit ($|\lambda| < 1$, $|\gamma| > 1$). This fact was first noticed in [4] in the case of three-dimensional flows (two-dimensional diffeomorphisms). Another effectively computed $\Omega$-modulus is the invariant $\tau$ (see [12, 20, 21]). This $\Omega$-modulus is

expressed via the coefficients of the Poincaré map near the global piece of the homoclinic orbit. In the multidimensional case, when the saddle periodic orbit is a saddle–focus, i.e., when we take $\lambda = |\lambda|e^{\pm i\varphi}$ $(\varphi \neq 0, \pi)$ and/or $\gamma = |\gamma|e^{\pm i\psi}$ $(\psi \neq 0, \pi)$ as the leading multipliers, the corresponding angular arguments $\varphi$ and $\psi$ are $\Omega$-moduli too [1, 22]. Knowing these moduli helps one to give, in many cases, reasonable answers to the questions concerning the structure and the main bifurcations of the set $N$.

Notably, conservative systems have moduli of local $\Omega$-conjugacy as well. Of course, for a symplectic map, $\theta$ is always constant: $\theta = 1$; moreover, $\varphi = \psi$. Therefore, if the leading multipliers are complex (this is possible for symplectic maps starting with dimension 4), the main $\Omega$-modulus is the invariant $\varphi$ [22, 24]. Other $\Omega$-moduli, analogous to $\tau$, exist here as well. They are certain functions of the coefficients of the Poincaré map near the global piece of the homoclinic orbit; these are, for example, invariants $\alpha$ and $\beta$ (see (1.28) below). In this paper, we consider exactly the families where the governing parameters are, along with $\varphi$, the $\Omega$-moduli $\alpha$ or $\beta$.

The proof or the main theorem consists of two main steps.

At the *first step*, we mainly use the results of our previous paper [18] (collected here in Section 2). Here we consider the possibility of the birth of (one) elliptic periodic orbit as a result of bifurcations of a homoclinic tangency to a fixed point of the saddle–focus type. We consider two-parameter families $F_{\mu\varphi}$ of symplectic diffeomorphisms, which are transverse to $\mathcal{H}$. As the governing parameters, we choose the splitting parameter $\mu$ (roughly speaking, it measures the distance to $\mathcal{H}$) and the angular argument $\varphi$.[5] For the original diffeomorphism $F_0 \in \mathcal{H}$, we denote the saddle–focus fixed point by $O$ and the orbit of homoclinic tangency by $\Gamma$. Let $U$ denote a sufficiently small fixed neighborhood of the set $O \cup \Gamma$. This neighborhood is the union of a small neighborhood $U_0$ of the point $O$ and a finite number of small neighborhoods of those points of $\Gamma$ that do not belong to $U_0$. A trajectory that is periodic or homoclinic to $O$ and lies entirely in $U$ is called $p$-round if it has exactly $p$ intersection points with every component of the set $U \setminus U_0$. At the first step, we consider bifurcations of the single-round ($p = 1$) periodic orbits in $U$. As it follows from [18] (see Theorem 1 in [18], or a more general Theorem 1 in Section 2 of the present paper),

> *in any neighborhood of the point* $(\mu = 0, \varphi = \varphi_0)$ *in the plane of parameters* $(\mu, \varphi)$, *there exists a region of parameter values for which the corresponding diffeomorphism* $F_{\mu\varphi}$ *has a single-round periodic orbit in* $U$ *of any preassigned type* (*generic elliptic, saddle–center* $(+)$, *saddle–center* $(-)$, *saddle* $(+,+)$, *saddle* $(+,-)$, *saddle* $(-,-)$, *or saddle–focus*).

Note that different regions corresponding to the existence of single-round elliptic periodic orbits do not generally intersect. This means that the diffeomorphisms close to $F_0$ cannot, in general, have more than one *single-round* elliptic periodic orbit in a sufficiently small fixed neighborhood of $\Gamma$ (see Proposition 1 in Section 2).

The *second step* is the study of the possibility of the coexistence of multiround generic elliptic periodic orbits (as well as periodic orbits of other types) for the diffeomorphisms in $\mathcal{H}$ close to $F_0$. This step is the main part of the paper. Essentially, we consider double-round periodic orbits. We will employ the following logic. First, we include $F_0$ in some one-parameter family $F_\varphi$ of diffeomorphisms in $\mathcal{H}$. Thus, we take a family of symplectic diffeomorphisms such that the homoclinic tangency is not split when the parameter varies, while the angular argument $\varphi$ of the complex multipliers of the saddle–focus changes monotonically. Since $\varphi$ is an $\Omega$-modulus, its arbitrary variations lead to

[5] An analogous situation takes place in the case of general systems with homoclinic tangencies. For example, for diffeomorphisms with a nontransverse homoclinic orbit to a saddle–focus fixed point (in contrast to the case of a saddle with real leading multipliers), the study of the bifurcations of single-round periodic orbits requires at least a two- or three-parameter analysis [1, 2]. Moreover, the $\Omega$-moduli, which are the angular arguments ($\varphi$ and $\psi$) of complex multipliers of the saddle–focus, are considered as governing parameters along with the splitting parameter (which is naturally a governing one).

the creation of secondary homoclinic tangencies. Namely, we show that (see Theorems 2 and 2′ in Section 3),

> *under general assumptions, in any sufficiently small interval of values of $\varphi$, the values of $\varphi$ are dense such that the corresponding diffeomorphism $F_\varphi$ has a double-round homoclinic orbit corresponding to a simple quadratic tangency of the invariant manifolds of the saddle–focus fixed point.*

The general assumptions here are the assumption that the original homoclinic tangency of the manifolds $W^s(O)$ and $W^u(O)$ at the points of $\Gamma$ is simple and quadratic (see the definitions in Section 1) and that the inequality

$$\sin(\alpha - \beta) \neq 0 \tag{2}$$

holds. The method of the proof (see the proof of Theorem 2′ in Section 3) allows one to find four different series of double-round homoclinic tangencies; the values of $\varphi$ corresponding to each series are dense in any interval.[6] All these tangencies are simple and quadratic. Moreover, for fixed $\varphi$, the tangencies of the first two series split with nonzero velocities under any variation in $\beta$, while the tangencies of the third and fourth series split with nonzero velocities under any variation in $\alpha$ (see Section 3). Recall that the original homoclinic tangency does not split here, whereby we can study the bifurcations of the obtained double-round homoclinic tangencies without leaving the bifurcational surface $\mathcal{H}$. Here, it is sufficient to apply the results of the first step related to bifurcations of the homoclinic tangency in general two-parameter families of symplectic diffeomorphisms with a fixed saddle–focus point. To this end, we can consider any two-parameter family $F_{\nu\varphi}$ of diffeomorphisms in $\mathcal{H}$, where the parameter $\nu$ is chosen so that

$$\frac{\partial}{\partial \nu}(\alpha, \beta) \neq 0. \tag{3}$$

This ensures that either $\alpha$ or $\beta$ change monotonically as $\nu$ varies. Hence, the homoclinic tangencies of at least two of the above series will always split with a nonzero velocity. Since the parameter values corresponding to the double-round homoclinic tangencies in $F_{\nu\varphi}$ are dense and since these tangencies split with nonzero velocities as $\nu$ varies, it follows from Theorem 1 that the existence regions of double-round periodic orbits of any given type are dense in the plane of parameters $(\nu, \varphi)$. Near any point inside any such region, we find (by virtue of Theorem 2′) the values of parameters corresponding to some double-round homoclinic tangency; hence (by Theorem 1), we find there a small region for which the system has one more double-round periodic orbit of any preassigned type. Thus, we obtain that, in the parameter plane, those regions are dense in which the system has a pair of double-round periodic orbits of arbitrarily chosen types. Repeating the procedure, we obtain that, in the parameter plane, those regions are dense that correspond to the existence of three, four, etc. double-round periodic orbits of arbitrary types; then, passing to the limit proves the main theorem.

In fact, some generalizations of the main theorem are possible (see Theorems 3 and 4 in Section 4).

Note also that all the results remain valid both for the case of four-dimensional symplectic diffeomorphisms having a saddle–focus periodic point with a homoclinic tangency and in the case of Hamiltonian systems of three degrees of freedom which have, at some level of a constant value of the Hamiltonian, a saddle–focus periodic orbit with a curve of homoclinic tangency (see Section 1.3 for more details).

[6] Condition (2) is very essential here because the case $\sin(\alpha - \beta) = 0$ is quite special. For example, if $\alpha = \beta$, it may happen that the diffeomorphism $F_\varphi$ in $U$ does not have homoclinic orbits other than $\Gamma$ [24].

## 1. PRELIMINARY RESULTS: THE LOCAL AND GLOBAL MAPS $T_0$ AND $T_1$

Consider a $C^r$-smooth ($r \geq 2$) symplectic diffeomorphism $F_0$ for which the following conditions hold.

A. $F_0$ has a *saddle–focus* fixed point $O$ with multipliers $\nu_{1,2} = \lambda_0 e^{\pm i\varphi_0}$ and $\nu_{3,4} = \lambda_0^{-1} e^{\pm i\varphi_0}$, where $0 < \lambda_0 < 1$ and $0 < \varphi_0 < \pi$.

B. The two-dimensional stable and unstable invariant manifolds $W^s$ and $W^u$ of the point $O$ have a *simple tangency* at the points of some homoclinic orbit $\Gamma$. Namely, let $\mathcal{T}_M W$ denote the tangent space to a manifold $W$ at a point $M \in W$. Let $M^*$ be one of homoclinic points from the orbit $\Gamma$. Then, we require the following:

B.1. $\dim(\mathcal{T}_{M^*} W^s \cap \mathcal{T}_{M^*} W^u) = 1$.

B.2. The tangency of the manifolds $W^s$ and $W^u$ at the point $M^*$ is quadratic.

Conditions B.1 and B.2 can be reformulated as the requirement that, in some local $C^2$-coordinates $(\xi_1, \xi_2, \eta_1, \eta_2)$ near the point $M^*$, the equations of $W^s$ and $W^u$ have the following form:

$$W^s = \{\eta_1 = 0,\ \eta_2 = 0\} \qquad \text{and} \qquad W^u = \{\xi_2 = 0,\ \eta_1 = \xi_1^2\}. \tag{1.1}$$

If one considers one-parameter families that depend smoothly on some parameter $\nu$ and split the given tangency, then $C^2$-coordinates near $M^*$ can be introduced in such a way that the equations of $W^s(\nu)$ and $W^u(\nu)$ near $M^*$ take the form

$$W^s = \{\eta_1 = 0,\ \eta_2 = 0\} \qquad \text{and} \qquad W^u = \{\xi_2 = 0,\ \eta_1 = \mu(\nu) + \xi_1^2\}. \tag{1.2}$$

The quantity $\mu(\nu)$ in (1.2) is called a splitting parameter for the manifolds $W^s$ and $W^u$ near $M^*$: when $\mu(\nu) > 0$, the tangency disappears and the manifolds $W^s$ and $W^u$ do not intersect, whereas, when $\mu(\nu) < 0$, two points of a transverse intersection appear. The tangency is said to split generically if $\frac{d\mu(0)}{d\nu} \neq 0$.

Let $U$ be a sufficiently small fixed neighborhood of the set $O \cup \Gamma$. It is the union of a small neighborhood $U_0$ of the point $O$ and a finite number of small neighborhoods of those points of the orbit $\Gamma$ that do not belong to $U_0$. An orbit that is periodic or homoclinic to $O$ and entirely lies in $U$ is called *p-round* if it has exactly $p$ points of intersection with each of the components of the set $U \setminus U_0$. According to this definition, $\Gamma$ is a single-round homoclinic orbit. Condition B implies that the diffeomorphism $F_0$ has no other single-round homoclinic orbits in $U$.

It is obvious that any diffeomorphism close to $F_0$ has a saddle–focus fixed point $O' \in U_0$ close to $O$. The diffeomorphisms close to $F_0$ (in the $C^r$-topology) may also have a single-round orbit $\Gamma'$, homoclinic to $O'$, which is close to $\Gamma$ and corresponds to a simple tangency of the invariant manifolds of $O'$. Such diffeomorphisms form a bifurcational surface $\mathcal{H}$ of codimension 1 in the space of four-dimensional symplectic $C^r$-diffeomorphisms. In the present paper, we study the dynamical properties and the bifurcations of diffeomorphisms from the set $\mathcal{H}$.

As we noted in the Introduction, our analysis is based on the study of the first-return maps and their iterations. As usual, these maps are represented as compositions of some iteration of the local map $T_0$ that acts in a small neighborhood of the fixed point $O$ and the global map $T_1$ defined by the trajectories lying in a small neighborhood of some finite segment of the homoclinic orbit $\Gamma$. Below, we recall some facts (mostly from [18]) concerning the properties of local and global maps. Note that, along with the diffeomorphism $F_0$ satisfying conditions A and B, we also consider parametric families[7] $F_\varepsilon$ of symplectic $C^r$-smooth diffeomorphisms that include the diffeomorphism $F_0$ at $\varepsilon = 0$.

[7] We consider here either families transverse to the bifurcational surface $\mathcal{H}$ or families lying within $\mathcal{H}$.

Let the family $F_\varepsilon$ be also $C^r$-smooth with respect to $\varepsilon$. Then, for any small $\varepsilon$, the diffeomorphism $F_\varepsilon$ has a saddle–focus fixed point $O_\varepsilon \in U_0$ with multipliers $\lambda(\varepsilon)e^{\pm i\varphi(\varepsilon)}$ and $\lambda^{-1}(\varepsilon)e^{\pm i\varphi(\varepsilon)}$, where $\lambda(0) = \lambda_0$ and $\varphi(0) = \varphi_0$. Naturally, the local and global maps will also smoothly depend on $\varepsilon$ in this case.

**1.1. Properties of the local map $T_0$.** Denote by $T_0(\varepsilon)$ the restriction of the diffeomorphism $F_\varepsilon$ onto the neighborhood $U_0$ of the point $O_\varepsilon$, i.e., $T_0 \equiv F_\varepsilon|_{U_0}$. The map $T_0$ is called a *local map*. Obviously, one can introduce local coordinates in $U_0$ such that the point $O_\varepsilon$ lies at the origin. Moreover, the following result holds.

**Lemma 1** [18]. *Let $r \geq 2$. Then, there exist $\varepsilon_0 > 0$ and a neighborhood $U_0$ of $O$ such that, for all $\|\varepsilon\| \leq \varepsilon_0$, the local map $T_0(\varepsilon)$ is written in the following form in certain symplectic coordinates in $U_0$, of class $C^r$ with respect to the phase variables and $C^{r-2}$ with respect to the parameters*:

$$\begin{aligned} \overline{x} &= L(\varepsilon)x + f(x,y,\varepsilon)x, \\ \overline{y} &= L^{-\top}(\varepsilon)y + g(x,y,\varepsilon)y, \end{aligned} \tag{1.3}$$

*where*

$$L(\varepsilon) = \lambda(\varepsilon)\begin{pmatrix} \cos\varphi(\varepsilon) & -\sin\varphi(\varepsilon) \\ \sin\varphi(\varepsilon) & \cos\varphi(\varepsilon) \end{pmatrix}, \qquad L^{-\top}(\varepsilon) = \lambda^{-1}(\varepsilon)\begin{pmatrix} \cos\varphi(\varepsilon) & -\sin\varphi(\varepsilon) \\ \sin\varphi(\varepsilon) & \cos\varphi(\varepsilon) \end{pmatrix}. \tag{1.4}$$

*Here, $x$ and $y$ are two-dimensional*: $x = (x_1, x_2)$ *and* $y = (y_1, y_2)$; *the $C^{r-1}$-smooth functions $f$ and $g$ satisfy the following conditions*:

$$\begin{aligned} f(0,y,\varepsilon) &\equiv 0, \qquad g(0,y,\varepsilon) \equiv 0, \\ f(x,0,\varepsilon) &\equiv 0, \qquad g(x,0,\varepsilon) \equiv 0. \end{aligned} \tag{1.5}$$

We will use the coordinates of Lemma 1 because the iterations of the local map $T_0$, written in the "cross"-form, will be close in this case to the iterations of a linear map. Namely, denote $(x_k, y_k) = T_0^k(x_0, y_0)$. It is well known [9, 25, 26] that, for a sufficiently small $\delta$, for any $k \geq 0$ and $x_0$, $y_k$ such that $\|x_0\| \leq \delta/2$, $\|y_k\| \leq \delta/2$, the corresponding segment $(x_j, y_j)_{j=0}^k$ of an orbit of the map $T_0$ is defined uniquely, and all its points lie in the $\delta$-neighborhood of the fixed point $O(0,0)$. Moreover, the following result holds true (see [18] and [21, 10]).

**Lemma 2.** *Let $r \geq 3$ and let identities* (1.5) *hold.*[8] *Then,*

$$\begin{aligned} x_k &= L(\varepsilon)^k x_0 + k\lambda^{2k} P_k(x_0, y_k, \varepsilon)x_0, \\ y_0 &= (L(\varepsilon)^\top)^k y_k + k\lambda^{2k} Q_k(x_0, y_k, \varepsilon)y_k, \end{aligned} \tag{1.6}$$

*where the functions $P_k$ and $Q_k$ are uniformly bounded for all $k$ along with all the derivatives up to the order $r-2$; the derivatives of order $r-1$ of the right-hand sides of* (1.6) *with respect to $(x_0, y_k)$ tend to zero as $k \to +\infty$.*

**1.2. Properties of the global map $T_1$.** In the coordinates of Lemma 1, the equations for the two-dimensional manifolds $W^s_{\mathrm{loc}}(O(\varepsilon))$ and $W^u_{\mathrm{loc}}(O(\varepsilon))$ in $U_0$ are $y_1 = y_2 = 0$ and $x_1 = x_2 = 0$, respectively. By assumption, the diffeomorphism $F_0$ has a homoclinic orbit $\Gamma$ at the points of which the two-dimensional invariant manifolds of the saddle–focus $O$ have a simple tangency, i.e., conditions B.1 and B.2 hold. The points of $\Gamma$ accumulate to $O$, so that there is an infinite set of homoclinic points both in $W^s_{\mathrm{loc}}(O)$ and in $W^u_{\mathrm{loc}}(O)$. Take any pair of these points, $M^+(x^+, 0) \in$

[8] For $r \geq 3$, identities (1.5) mean that $f(x,y,\varepsilon) = O(\|x\| \cdot \|y\|)$ and $g(x,y,\varepsilon) = O(\|x\| \cdot \|y\|)$.

$W^s_{\mathrm{loc}}(O) \cap U_0$ and $M^-(0, y^-) \in W^u_{\mathrm{loc}}(O) \cap U_0$, where $x^+ = (x_1^+, x_2^+)$ and $y^- = (y_1^-, y_2^-)$; here, $(x_1^+)^2 + (x_2^+)^2 \neq 0$ and $(y_1^-)^2 + (y_2^-)^2 \neq 0$.

Let $\Pi^+$ and $\Pi^-$ be some neighborhoods of the points $M^+$ and $M^-$, respectively, that lie in $U_0$. We assume that the neighborhoods $\Pi^+$ and $\Pi^-$ are sufficiently small, so that, in any case, $T_0(\Pi^+) \cap \Pi^+ = \varnothing$ and $T_0^{-1}(\Pi^-) \cap \Pi^- = \varnothing$. By construction, $F_0^{n_0}(M^-) = M^+$ for some positive $n_0$. Consider the map $T_1 \equiv F_\varepsilon^{n_0} \colon \Pi^- \to \Pi^+$, which is defined by the orbits of the diffeomorphism $F_\varepsilon$ near the global piece of $\Gamma$. We will call $T_1$ a *global map*. By definition, $T_1(M^-) = M^+$ at $\varepsilon = 0$. Denote the coordinates in $\Pi^+$ by $(x_0, y_0) = (x_{01}, x_{02}, y_{01}, y_{02})$, and the coordinates in $\Pi^-$ by $(x_1, y_1) = (x_{11}, x_{12}, y_{11}, y_{12})$. Let us write the Taylor expansion of the global map $T_1$ at the point $M^-(0, y^-)$ for $\varepsilon = 0$:

$$\overline{x}_0 - x^+ = ax_1 + b(y_1 - y^-) + \dots, \qquad \overline{y}_0 = cx_1 + d(y_1 - y^-) + \dots, \tag{1.7}$$

where the dots stand for the terms of the second order and higher; here, $a$, $b$, $c$, and $d$ are some $2 \times 2$ matrices. Together, these matrices comprise the following symplectic $4 \times 4$ matrix:

$$S = \begin{pmatrix} a & b \\ c & d \end{pmatrix};$$

hence, the following relations hold (see, e.g., [18]):

$$\begin{aligned} &(1)\ a^\top c = c^\top a, \\ &(2)\ b^\top d = d^\top b, \\ &(3)\ d^\top a - b^\top c = I, \end{aligned} \tag{1.8}$$

and

$$\begin{aligned} &(1)\ ab^\top = ba^\top, \\ &(2)\ cd^\top = dc^\top, \\ &(3)\ da^\top - cb^\top = I. \end{aligned} \tag{1.9}$$

For the matrix that is inverse to $S$ (it is also symplectic), we have the following formula:

$$S^{-1} = \begin{pmatrix} d^\top & -b^\top \\ -c^\top & a^\top \end{pmatrix}. \tag{1.10}$$

Note that a linear rotation in $U_0$,

$$x_{\mathrm{new}} = \mathcal{R}_\theta x, \qquad y_{\mathrm{new}} = \mathcal{R}_\theta y, \tag{1.11}$$

where

$$\mathcal{R}_\theta = \begin{pmatrix} \cos\theta & -\sin\theta \\ \sin\theta & \cos\theta \end{pmatrix}, \tag{1.12}$$

is a symplectic coordinate transformation. Moreover, this is a unique symplectic transformation that preserves the form of the matrix $L$ of the linear part of the local map $T_0$ and identity (1.5). Thus, we are allowed to make linear rotations in $U_0$ with arbitrary angles $\theta$, and we will use them in order to simplify the matrix $S$, i.e., to nullify as many entries of $d$ as possible.

Note that such a rotation transforms the matrix $d$ as follows:

$$d_{\mathrm{new}} = \mathcal{R}_{-\theta} d \mathcal{R}_\theta. \tag{1.13}$$

By condition B.1, for $\varepsilon = 0$, the surface $T_1(W^u_{\mathrm{loc}})$ is tangent to the plane $W^s_{\mathrm{loc}}$ at the point $M^+(x^+, 0)$ along a single direction. Consider the linear part of $T_1$ at the point $M^-$:

$$\overline{x}_0 - x^+ = ax_1 + b(y_1 - y^-), \qquad \overline{y}_0 = cx_1 + d(y_1 - y^-). \tag{1.14}$$

Condition B.1 reads now as follows: the image of the plane $\{x_1 = 0\}$ under this linear map intersects the plane $\{y_0 = 0\}$ in a straight line. In other words, the equation

$$0 = d(y_1 - y^-) \tag{1.15}$$

has a one-parameter family of solutions. In this case,

$$\det d = 0 \qquad \text{and} \qquad \operatorname{rank} d = 1; \tag{1.16}$$

i.e., the rows of the matrix

$$d = \begin{pmatrix} d_{11} & d_{12} \\ d_{21} & d_{22} \end{pmatrix}$$

are linearly dependent, but not all its entries are zero. Obviously, one can choose $\theta$ in (1.13) (and, accordingly, in (1.11)) such that the matrix $d$ will transform into

$$d_{\mathrm{new}} = \begin{pmatrix} 0 & 0 \\ d_{21} & d_{22} \end{pmatrix},$$

where $d_{21}^2 + d_{22}^2 \neq 0$. We assume that $d_{22} \neq 0$. If this is not the case (i.e., if $d_{22} = 0$ and $d_{21} \neq 0$), then one can take another pair of homoclinic points, namely, $(T_0^{-1}M^-, M^+)$ instead of $(M^-, M^+)$. The new global map will be $T_1' = T_1T_0$, and, taking into account that the function $g$ from the formula (1.3) for $T_0$ vanishes identically on $W^u_{\mathrm{loc}}$, it is easy to see that the corresponding matrix $d'$ will have the form

$$d' = \lambda^{-1}\begin{pmatrix} 0 & 0 \\ d_{21} & 0 \end{pmatrix}\begin{pmatrix} \cos\varphi & -\sin\varphi \\ \sin\varphi & \cos\varphi \end{pmatrix} = \lambda^{-1}\begin{pmatrix} 0 & 0 \\ d_{21}\cos\varphi & -d_{21}\sin\varphi \end{pmatrix}.$$

Since $\sin\varphi \neq 0$, it follows that $d'_{22}(= -d_{21}\sin\varphi) \neq 0$.

Thus, we may assume that the Jacobi matrix $S$ of the global map $T_1$ computed at the point $M^-$ for $\varepsilon = 0$ has the form

$$S = \begin{pmatrix} a_{11} & a_{12} & b_{11} & b_{12} \\ a_{21} & a_{22} & b_{21} & b_{22} \\ c_{11} & c_{12} & 0 & 0 \\ c_{21} & c_{22} & d_{21} & d_{22} \end{pmatrix}, \tag{1.17}$$

where $d_{22} \neq 0$. Since $S$ is a symplectic matrix, in view of (1.8) and (1.9), its entries satisfy the following equalities:

$$\begin{aligned} &\text{(a)}\ \ b_{21}d_{22} - b_{22}d_{21} = 0, \\ &\text{(b)}\ \ c_{11}d_{21} + c_{12}d_{22} = 0, \\ &\text{(c)}\ \ c_{11}(b_{12}d_{21} - b_{11}d_{22}) = d_{22}, \\ &\text{(d)}\ \ c_{12}(b_{12}d_{21} - b_{11}d_{22}) = -d_{21}, \\ &\text{(e)}\ \ a_{21}d_{21} - b_{21}c_{21} = 1 + b_{11}c_{11}. \end{aligned} \tag{1.18}$$

Since $d_{22} \neq 0$, it follows from (c) in (1.18) that

$$c_{11} \neq 0, \qquad b_{11}d_{22} - b_{12}d_{21} \neq 0. \tag{1.19}$$

Taking into account quadratic terms in the equation for $\overline{y}_{01}$, we can write the map $T_1$ as

$$\begin{aligned}
\overline{x}_{01} - x_1^+ &= a_{11}x_{11} + a_{12}x_{12} + b_{11}(y_{11} - y_1^-) + b_{12}(y_{12} - y_2^-) + \dots,\\
\overline{x}_{02} - x_2^+ &= a_{21}x_{11} + a_{22}x_{12} + b_{21}(y_{11} - y_1^-) + b_{22}(y_{12} - y_2^-) + \dots,\\
\overline{y}_{01} &= c_{11}x_{11} + c_{12}x_{12} + D_1(y_{11} - y_1^-)^2 + D_2(y_{11} - y_1^-)(y_{12} - y_2^-) + D_3(y_{12} - y_2^-)^2 + \dots,\\
\overline{y}_{02} &= c_{21}x_{11} + c_{22}x_{12} + d_{21}(y_{11} - y_1^-) + d_{22}(y_{12} - y_2^-) + \dots.
\end{aligned} \tag{1.20}$$

Since $x_{11} = x_{12} = 0$ on $W^u_{\mathrm{loc}}$, the equation of the surface $T_1(W^u_{\mathrm{loc}})$ can be written as follows:

$$\begin{aligned}
x_{01} - x_1^+ &= b_{11}(y_{11} - y_1^-) + b_{12}(y_{12} - y_2^-) + \dots,\\
x_{02} - x_2^+ &= b_{21}(y_{11} - y_1^-) + b_{22}(y_{12} - y_2^-) + \dots,\\
y_{01} &= D_1(y_{11} - y_1^-)^2 + D_2(y_{11} - y_1^-)(y_{12} - y_2^-) + D_3(y_{12} - y_2^-)^2 + \dots,\\
y_{02} &= d_{21}(y_{11} - y_1^-) + d_{22}(y_{12} - y_2^-) + \dots,
\end{aligned} \tag{1.21}$$

where $(y_{11} - y_1^-)$ and $(y_{12} - y_2^-)$ are the coordinates on $W^u_{\mathrm{loc}}$. The equation for $T_1(W^u_{\mathrm{loc}})$ can be written in an explicit form as well. Namely, since $d_{22} \neq 0$, it follows that the last equation of (1.21) can be resolved with respect to $y_{12} - y_2^-$:

$$y_{12} - y_2^- = \frac{1}{d_{22}}y_{02} - \frac{d_{21}}{d_{22}}(y_{11} - y_1^-) + \dots. \tag{1.22}$$

Plugging (1.22) into (1.21), we obtain

$$\begin{aligned}
x_{01} - x_1^+ &= \left(b_{11} - b_{12}\frac{d_{21}}{d_{22}}\right)(y_{11} - y_1^-) + \frac{b_{12}}{d_{22}}y_{02} + \dots,\\
x_{02} - x_2^+ &= \left(b_{21} - b_{22}\frac{d_{21}}{d_{22}}\right)(y_{11} - y_1^-) + \frac{b_{22}}{d_{22}}y_{02} + \dots,\\
y_{01} &= \left[D_1 - D_2\left(\frac{d_{21}}{d_{22}}\right) + D_3\left(\frac{d_{21}}{d_{22}}\right)^2\right](y_{11} - y_1^-)^2 + \widetilde{D}_2(y_{11} - y_1^-)y_{02} + \widetilde{D}_3 y_{02}^2 + \dots.
\end{aligned} \tag{1.23}$$

Denote

$$D_0 \equiv D_1 - D_2\left(\frac{d_{21}}{d_{22}}\right) + D_3\left(\frac{d_{21}}{d_{22}}\right)^2.$$

Since $d_{22} \neq 0$, we deduce from (1.18) that

$$b_{11} - b_{12}\frac{d_{21}}{d_{22}} = -\frac{1}{c_{11}}, \qquad b_{21} - b_{22}\frac{d_{21}}{d_{22}} = 0.$$

Now, formulas (1.23) can be rewritten as

$$\begin{aligned}
x_{01} - x_1^+ &= -\frac{1}{c_{11}}(y_{11} - y_1^-) + \frac{b_{12}}{d_{22}}y_{02} + O\Big(\big[|y_{02}| + |y_{11} - y_1^-|\big]^2\Big),\\
x_{02} - x_2^+ &= \frac{b_{22}}{d_{22}}y_{02} + O\Big(\big[|y_{02}| + |y_{11} - y_1^-|\big]^2\Big),\\
y_{01} &= D_0(y_{11} - y_1^-)^2 + \widetilde{D}_2(y_{11} - y_1^-)y_{02} + \widetilde{D}_3 y_{02}^2 + O\Big(\big[|y_{02}| + |y_{11} - y_1^-|\big]^3\Big),
\end{aligned}$$

or, finally,

$$\begin{aligned} x_{02} - x_2^+ &= \frac{b_{22}}{d_{22}} y_{02} + R_1, \\ y_{01} &= (x_{01} - x_1^+)^2 [c_{11}^2 D_0 + R_0] + \widehat{D}_2 (x_{01} - x_1^+) y_{02} + \widehat{D}_3 y_{02}^2 + y_{02} R_2, \end{aligned} \tag{1.24}$$

where $R_{1,2} = O([|y_{02}| + |x_{01} - x_1^+|]^2)$ and $R_0 = O(|x_{01} - x_1^+|)$. If we introduce now local coordinates near the point $M^+$,

$$\xi_1 = (x_{01} - x_1^+)\sqrt{c_{11}^2 D_0 + R_0}, \qquad \xi_2 = (x_{02} - x_2^+) - \frac{b_{22}}{d_{22}} y_{02} - R_1,$$
$$\eta_1 = y_{01} - \widehat{D}_2 (x_{01} - x_1^+) y_{02} - \widehat{D}_3 y_{02}^2 - y_{02} R_2, \qquad \eta_2 = y_{02},$$

then equations (1.24) are rewritten as

$$\xi_2 = 0, \qquad \eta_1 = \xi_1^2. \tag{1.25}$$

Thus, the equations of $W^s$ and $W^u$ in the coordinates $(\xi_1, \xi_2, \eta_1, \eta_2)$ in a small neighborhood of $M^+$ are the same as (1.1) provided that $D_0 \neq 0$. Hence, our condition B.2 of the quadraticity of the homoclinic tangency is equivalent to the requirement

$$D_0 \neq 0. \tag{1.26}$$

We may always assume that $D_0 > 0$ (because the sign of $D_0$ can always be changed by the coordinate transformation $(x, y) \to (-x, -y)$).

We see that the global map $T_1$ can be written in the form (1.20), or it can be written in the following *cross-form* (with respect to the coordinate $y_2$):

$$\begin{aligned} \overline{x}_{01} - x_1^+ &= \widetilde{a}_{11} x_{11} + \widetilde{a}_{12} x_{12} - \frac{1}{c_{11}} (y_{11} - y_1^-) + \frac{b_{12}}{d_{22}} \overline{y}_{02} + \dots, \\ \overline{x}_{02} - x_2^+ &= \widetilde{a}_{21} x_{11} + \widetilde{a}_{22} x_{12} + \frac{b_{22}}{d_{22}} \overline{y}_{02} + \dots, \\ \overline{y}_{01} &= c_{11} x_{11} + c_{12} x_{12} + D_0 (y_{11} - y_1^-)^2 + \widetilde{D}_2 (y_{11} - y_1^-) \overline{y}_{02} + \widetilde{D}_3 \overline{y}_{02}^2 + \dots, \\ y_{12} - y_2^- &= -\frac{c_{21}}{d_{22}} x_{11} - \frac{c_{22}}{d_{22}} x_{12} + \frac{1}{d_{22}} \overline{y}_{02} - \frac{d_{21}}{d_{22}} (y_{11} - y_1^-) + \dots, \end{aligned} \tag{1.27}$$

where $\widetilde{a}_{ij} = a_{ij} - b_{i2} c_{2j} d_{22}^{-1}$; here, the dots stand for the terms of order two and higher (with respect to the coordinates $x_{11}$, $x_{12}$, $y_{11} - y_1^-$, and $\overline{y}_{02}$) in the first, second, and fourth equations, and for the terms quadratic in $x_{11}$ and $x_{12}$ and all the terms of order three and higher in the third equation.

Note that, when the map $T_0$ is brought to the form (1.3) and the map $T_1$, to the form (1.20) (i.e., when there is no term linear in $y_1$ in the equation for[9] $\overline{y}_{01}$ and $D_0 > 0$), any symplectic coordinate transformation that preserves these conditions will have the following form in the restriction onto the stable manifold:

$$\begin{pmatrix} x_1 \\ x_2 \end{pmatrix} \mapsto \rho \begin{pmatrix} x_1 \\ x_2 \end{pmatrix},$$

[9]This means that the common tangent vector of $T_1(W^u_{\mathrm{loc}})$ and $W^s_{\mathrm{loc}}$ at the point $M^+$ coincides with the $x_{01}$-axis.

whereas, being restricted onto the unstable manifold, it will have the form

$$\begin{pmatrix} y_1 \\ y_2 \end{pmatrix} \mapsto \rho^{-1} \begin{pmatrix} y_1 \\ y_2 \end{pmatrix}$$

for a certain $\rho > 0$. It is obvious then that the quantities $\alpha$, $\beta$, and $A/B$ defined by the formulas

$$\begin{gathered} A = \sqrt{(y_1^-)^2 + (y_2^-)^2}, \qquad \sin\alpha = \frac{y_2^-}{A}, \qquad \cos\alpha = \frac{y_1^-}{A}, \\ B = \sqrt{[(x_1^+)^2 + (x_2^+)^2][c_{11}^2 + c_{12}^2]}, \qquad \sin\beta = \frac{c_{12}x_1^+ - c_{11}x_2^+}{B}, \qquad \cos\beta = \frac{c_{11}x_1^+ + c_{12}x_2^+}{B} \end{gathered} \tag{1.28}$$

are invariant with respect to such coordinate transformations; hence, they are defined uniquely by the given diffeomorphism for a fixed choice of a pair of homoclinic points. When we choose another pair of homoclinic points, $\alpha$ and $\beta$ get the same increment, proportional to $\varphi$, so that the difference $\alpha - \beta$ remains invariant. It is also easy to verify that the following formulas are valid for the diffeomorphism $F^{-1}$:

$$\alpha(F^{-1}) = \beta(F) + \pi, \qquad \beta(F^{-1}) = \alpha(F) + \pi, \qquad \frac{B(F^{-1})}{A(F^{-1})} = \frac{A(F)}{B(F)}. \tag{1.29}$$

At nonzero values of the parameter $\varepsilon$, formulas (1.20) and (1.27) for the global map are changed as follows. First, all the coefficients (i.e., $x^+, y^-, \dots, d_{22}$), as well as the terms denoted by dots, depend now on $\varepsilon$ (at least $C^{r-2}$-smoothly; see details in [18]). It is also easy to see that, since $D_0 \neq 0$, the values of $y_1^-(\varepsilon)$ and $y_2^-(\varepsilon)$ can be chosen so that the equation for $\overline{y}_{02}$ does not contain a constant (i.e., zero-order) term and, moreover,

$$\det d(\varepsilon) \equiv \det \frac{\partial \overline{y}_0}{\partial y_1}\bigg|_{(0,0,y_1^-,y_2^-)} = 0$$

(note that the corresponding values of $y_1^-(\varepsilon)$ and $y_2^-(\varepsilon)$ are uniquely defined by these conditions). Next, as in the case $\varepsilon = 0$, by means of a linear rotation (1.11) through a small angle $\theta = O(\varepsilon)$, we can always eliminate the term linear in $(y_1 - y^-)$ in the equation for $\overline{y}_{01}$, i.e., $d_{11}(\varepsilon) = d_{21}(\varepsilon) = 0$. Thus, the Jacobi matrix $S(\varepsilon)$ of the global map $T_1$ at the point $M^-(\varepsilon) = (0, 0, y_1^-, y_2^-)$ will preserve its form (1.17). Since $S(\varepsilon)$ is symplectic, equalities (1.18) remain valid for all small $\varepsilon$.

We see that the main difference from the case $\varepsilon = 0$ is attributed to the possible appearance of a nonzero constant term in the equation for $\overline{y}_{01}$. We denote this term by $\mu(\varepsilon)$. So, equation (1.20) for the map $T_1$ will take the following form for $\varepsilon \neq 0$:

$$\begin{aligned} \overline{x}_{01} - x_1^+ &= a_{11}x_{11} + a_{12}x_{12} + b_{11}(y_{11} - y_1^-) + b_{12}(y_{12} - y_2^-) + \dots, \\ \overline{x}_{02} - x_2^+ &= a_{21}x_{11} + a_{22}x_{12} + b_{21}(y_{11} - y_1^-) + b_{22}(y_{12} - y_2^-) + \dots, \\ \overline{y}_{01} &= \mu + c_{11}x_{11} + c_{12}x_{12} + D_1(y_{11} - y_1^-)^2 + D_2(y_{11} - y_1^-)(y_{12} - y_2^-) + D_3(y_{12} - y_2^-)^2 + \dots, \\ \overline{y}_{02} &= c_{21}x_{11} + c_{22}x_{12} + d_{21}(y_{11} - y_1^-) + d_{22}(y_{12} - y_2^-) + \dots, \end{aligned} \tag{1.30}$$

where all the coefficients, as well as all the terms denoted by dots, depend $C^{r-2}$-smoothly on $\varepsilon$. It is easy to see that $\mu$ is the splitting parameter for the manifolds $W^s(O)$ and $W^u(O)$ because the equations of $W^s(O)$ and $W^u(O)$ in a small neighborhood of the point $M^+$ can, in certain local coordinates, be written in the form (1.2); this is done in absolutely the same way as we proceeded when deriving (1.25) from (1.21).

Since $d_{22} \neq 0$ for any small $\varepsilon$, we can also rewrite (1.30) in the cross-form (see (1.27)):

$$\begin{aligned}
\overline{x}_{01} - x_1^+ &= \widetilde{a}_{11}x_{11} + \widetilde{a}_{12}x_{12} - \frac{1}{c_{11}}(y_{11} - y_1^-) + \frac{b_{12}}{d_{22}}\overline{y}_{02} + \dots,\\
\overline{x}_{02} - x_2^+ &= \widetilde{a}_{21}x_{11} + \widetilde{a}_{22}x_{12} + \frac{b_{22}}{d_{22}}\overline{y}_{02} + \dots,\\
\overline{y}_{01} &= \mu + c_{11}x_{11} + c_{12}x_{12} + D_0(y_{11} - y_1^-)^2 + \widetilde{D}_2(y_{11} - y_1^-)\overline{y}_{02} + \widetilde{D}_3\overline{y}_{02}^2 + \dots,\\
y_{12} - y_2^- &= -\frac{c_{21}}{d_{22}}x_{11} - \frac{c_{22}}{d_{22}}x_{12} + \frac{1}{d_{22}}\overline{y}_{02} - \frac{d_{21}}{d_{22}}(y_{11} - y_1^-) + \dots.
\end{aligned} \tag{1.31}$$

**1.3. Local and global maps for Hamiltonian flows.** Let a Hamiltonian system with three degrees of freedom have a saddle periodic orbit $L_0$. Let $U_0$ be a small four-dimensional cross-section to $L_0$ in the corresponding five-dimensional level of the Hamiltonian. Denote by $T_0$ the Poincaré map on $U_0$. Then $L_0 \cap U_0$ will be a fixed point of $T_0$. We assume that this fixed point is a saddle–focus. Assume also that the stable and unstable manifolds of the orbit $L_0$ have a simple (quadratic) tangency at the points of some homoclinic curve $\Gamma_0$. Then the global map $T_1$ is defined as a map by trajectories close to $\Gamma_0$ that start in a small neighborhood (in $U_0$) of some point $M^- \in \Gamma_0 \cap U_0 \subset W^u_{\mathrm{loc}} \cap U_0$ and end in a small neighborhood of some point $M^+ \in \Gamma_0 \cap U_0 \subset W^s_{\mathrm{loc}} \cap U_0$. The maps $T_0$ and $T_1$ preserve the standard symplectic structure, and the statements of Sections 1.1 and 1.2 hold true for these maps as well. Therefore, the results below will hold true both for the case of symplectic maps and for the case of Hamiltonian flows in a fixed level of the Hamiltonian. Note that the value $h$ of the Hamiltonian serves as a natural parameter in the latter case. Here, for small variations of $h$, the saddle periodic orbit does not disappear, while the homoclinic tangency splits in general. In that case, it is natural to take $h$ as the splitting parameter $\mu$.

## 2. ON BIFURCATIONS OF SINGLE-ROUND PERIODIC ORBITS

In this section, we consider the bifurcations of single-round periodic orbits in two-parameter families of diffeomorphisms that are transverse to $\mathcal{H}$. Most of the results were obtained in [18], but we repeat them here because they play a key role in the proof of the main theorem.

Consider a diffeomorphism $F_0$ satisfying conditions A and B in Section 1. Embed $F_0$ in the family $F_{\mu\varphi}$, where $\mu$ is the splitting parameter for the pieces $T_1(W^u_{\mathrm{loc}})$ and $W^s_{\mathrm{loc}}$ of invariant manifolds of the saddle–focus $O$ near the homoclinic point $M^+$ and $\varphi$ is the angular argument of the complex multipliers of the saddle–focus. We assume that $\mu$ varies in a small neighborhood of $\mu = 0$ and $\varphi$ varies in a small neighborhood of the point $\varphi_0 \in (0, \pi)$. Now, the local map $T_0$ and the global map $T_1$ depend smoothly on the parameters $\varepsilon = (\mu, \varphi)$. The map $T_0$ is given by (1.6), and $T_1$ is defined by (1.30) and (1.31).

The study of single-round periodic orbits of $F_{\mu\varphi}$ is reduced to the study of the fixed points of the maps $T_k \equiv T_1 T_0^k \colon \sigma_k^0 \to \sigma_k^0$ (i.e., the first-return maps) for all sufficiently large $k$. Here, $\sigma_k^0$ is a four-dimensional strip that is the domain of definition of the map $T_0^k$ acting from $\Pi^+$ into $\Pi^-$. In other words, $\sigma_k^0 = T_0^{-k}(\Pi^-) \cap \Pi^+$. Analogously, the image of the strip $\sigma_k^0$ by the map $T_0^k$ is the four-dimensional strip $\sigma_k^1 \equiv T_0^k(\sigma_k^0)$ lying in $\Pi^-$.

Let the neighborhoods $\Pi^+$ and $\Pi^-$ be defined as follows:

$$\Pi^+ = \bigl\{(x_0, y_0) \;\bigm|\; \|x_0 - x^+\| \le \delta_0,\ \|y_0\| \le \delta_0\bigr\}, \qquad \Pi^- = \bigl\{(x_1, y_1) \;\bigm|\; \|x_1\| \le \delta_0,\ \|y_1 - y^-\| \le \delta_0\bigr\} \tag{2.1}$$

with some small $\delta_0 > 0$. If the boundary (2.1) is plugged into the right-hand side of (1.6), then it

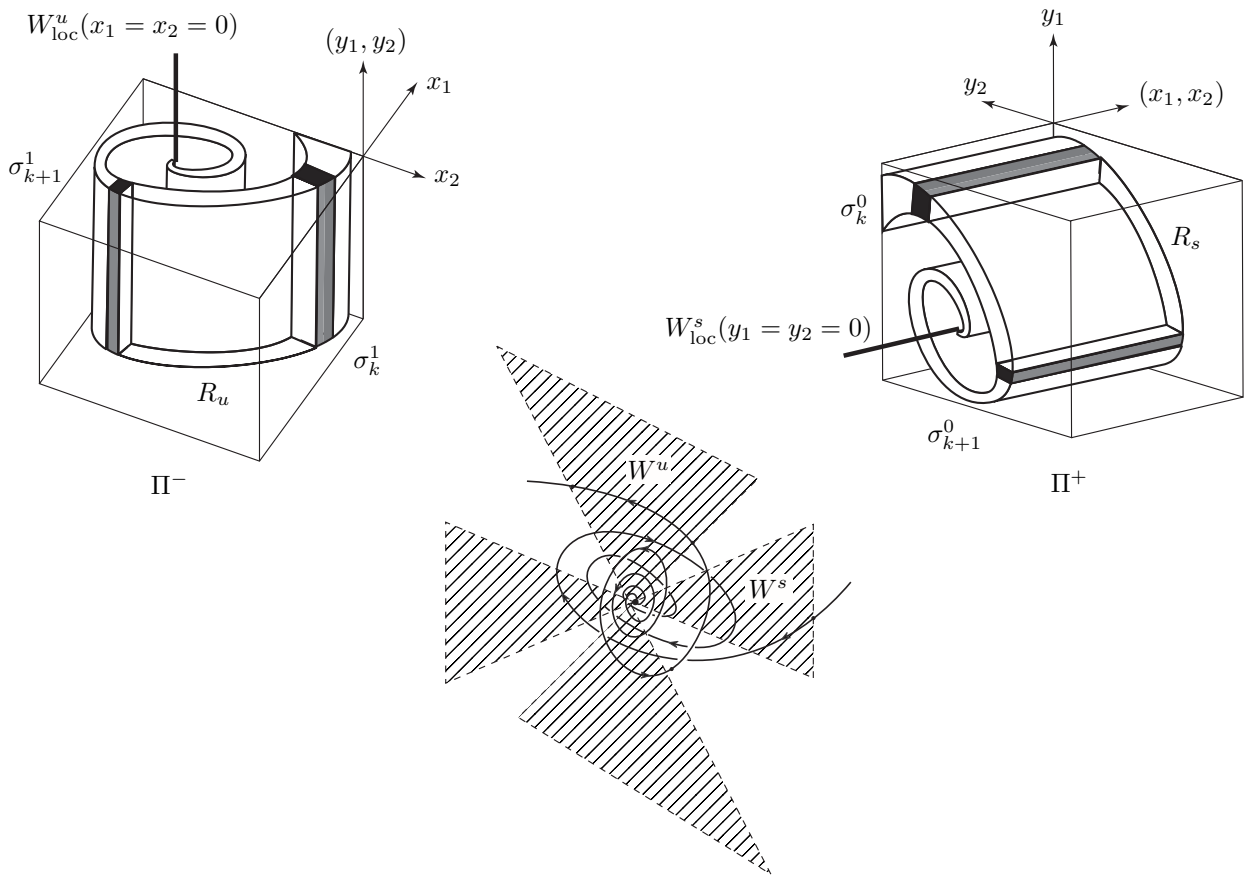


**Fig. 1.** *A four-dimensional picture that gives an idea of the structure of domains and ranges of the maps* $T_0^k\colon \Pi^+ \to \Pi^-$, $k = \overline{k}, \overline{k}+1, \dots$. Here, $\Pi^+$ and $\Pi^-$ are small neighborhoods of the homoclinic points $M^+ \in W^s_{\mathrm{loc}} \cap \Gamma_0$ and $M^- \in W^u_{\mathrm{loc}} \cap \Gamma_0$, respectively. The two-dimensional invariant manifolds $W^s$ and $W^u$ of the saddle–focus $O$ intersect transversely at the point $O$: $W^s_{\mathrm{loc}}$ has the equation $y_1 = y_2 = 0$ and $W^u_{\mathrm{loc}}$ has the equation $x_1 = x_2 = 0$. For simplicity, the two-dimensional areas $W^s_{\mathrm{loc}} \cap \Pi^+$ near the point $M^+$ and $W^u_{\mathrm{loc}} \cap \Pi^-$ near the point $M^-$ are depicted as (one-dimensional) segments. The domain of definition of $T_0^k$ is a four-dimensional strip $\sigma_k^0 \subset \Pi^+$ and the range of values of $T_0^k$ is a four-dimensional strip $\sigma_k^1 \subset \Pi^-$. The strips $\sigma_k^0$ lie inside a four-dimensional roll $R_s \subset \Pi^+$ that is winded about the area $W^s_{\mathrm{loc}} \cap \Pi^+$ and, thus, the strips $\sigma_k^0$ are accumulated on this area as $k \to \infty$. Analogously, the strips $\sigma_k^1$ lie inside a four-dimensional roll $R_u \subset \Pi^-$ that is winded about the area $W^u_{\mathrm{loc}} \cap \Pi^-$ and the strips are accumulated on this area as $k \to \infty$

is immediately seen that

$$\sigma_k^0 \equiv \Big\{(x_0, y_0) \;\Big|\; \|x_0 - x^+\| \le \delta_0,\ |y_{01} - \lambda^k A\cos(k\varphi - \alpha)| \le \lambda^k \delta_0,\ |y_{02} + \lambda^k A \sin(k\varphi - \alpha)| \le \lambda^k \delta_0\Big\}, \tag{2.2}$$

where $A$ and $\alpha$ are given by (1.28).

Analogously, the image of $\sigma_k^0$ under the map $T_0^k$ is the strip $\sigma_k^1$ in $\Pi^-$ defined by the following inequalities:

$$\begin{aligned}\sigma_k^1 \equiv \Big\{(x_1, y_1) \;\Big|\; &|x_{11} - \lambda^k(\cos k\varphi \cdot x_1^+ - \sin k\varphi \cdot x_2^+)| \le \lambda^k \delta_0,\\ &|x_{12} - \lambda^k(\cos k\varphi \cdot x_2^+ + \sin k\varphi \cdot x_1^+)| \le \lambda^k \delta_0,\ \|y_1 - y^-\| \le \delta_0\Big\}.\end{aligned} \tag{2.3}$$

As $k \to +\infty$, the strips $\sigma_k^1$ accumulate on $W^u_{\mathrm{loc}}(O)$ and the strips $\sigma_k^0$ accumulate on $W^s_{\mathrm{loc}}(O)$ as is shown in Fig. 1.

According to (1.31), the images $T_1(\sigma_k^1)$ of the strips $\sigma_k^1$ have a shape of four-dimensional "horseshoes," winding about the two-dimensional surface $T_1(W^u_{\mathrm{loc}}(O))\cap\Pi^+$. Namely, these horseshoes are given by the inequalities

$$\left|x_{02}-x_2^+-\frac{b_{22}}{d_{22}}y_{02}+R_1-\lambda^k\Big[(\widetilde{a}_{21}x_1^++\widetilde{a}_{22}x_2^+)\cos k\varphi-(\widetilde{a}_{21}x_2^+-\widetilde{a}_{22}x_1^+)\sin k\varphi\Big]\right|\le C\lambda^k\delta_0,$$

$$\begin{aligned}\Big|y_{01}-\mu-(x_{01}-x_1^+)^2\big[c_{11}^2D_0+R_0\big]+c_{11}\widetilde{D}_2(x_{01}-x_1^+)y_{02}-\widetilde{D}_3y_{02}^2-y_{02}R_2\\ -B\lambda^k\cos(k\varphi-\beta)\Big|\le C\lambda^k\delta_0,\end{aligned}\tag{2.4}$$

where $B$ and $\beta$ are given by (1.28), $C$ is a constant, and the functions $R_{0,1,2}$ are estimated as $R_{1,2}=O([|y_{02}|+|x_{01}-x_1^+|]^2)$ and $R_0=O(|x_{01}-x_1^+|)$ (cf. (1.24)).

It is clear that the mutual position of the strips and horseshoes in $\Pi^+$ essentially depends on the values of the parameters $\mu$ and $\varphi$. Hence, one can expect that the variations of these parameters can lead to various bifurcations, in particular, the bifurcations of periodic and homoclinic orbits. Among the main such bifurcations are bifurcations of single-round periodic orbits, i.e., bifurcations of the fixed points of the maps $T_k$ at large $k$. In order to study these bifurcations, it is convenient to make, first, a rescaling: the map $T_k$ is written in new coordinates and with new parameters (obtained from the old ones by affine transformations), which are no longer small and may take arbitrary finite values. Namely, we will use the following statement (see [18, Lemma 4]).

**Lemma 3.** *For all sufficiently large $k$, by a smooth transformation of coordinates and parameters, the map $T_k$ can be made asymptotically $C^{r-2}$-close (as $k\to+\infty$ uniformly in any bounded region of the values of $X_1,X_2,Y_1,Y_2$ and $M_1,M_2$) to the following four-dimensional quadratic map*:

$$\overline{X}_2=X_1,\qquad \overline{X}_1=Y_2,\qquad \overline{Y}_2=Y_1,\qquad \overline{Y}_1=M_1(Y_1+X_1)-X_2-Y_2^2+M_2,\tag{2.5}$$

*where*

$$\begin{aligned}&M_1=\lambda^{-k}(d_{22}\cos k\varphi-d_{21}\sin k\varphi+r_k^1),\\ &M_2=-\lambda^{-4k}d_{22}^2D_0\left(\mu+\frac{1}{\sqrt{d_{21}^2+d_{22}^2}}\lambda^k\big[x_2^+(c_{12}d_{21}-c_{11}d_{22})-y_1^-d_{21}-y_2^-d_{22}+r_k^2\big]\right),\end{aligned}\tag{2.6}$$

*where $r_k^{1,2}\to 0$ as $k\to\infty$. The ranges of values of the new coordinates and parameters cover, in the limit as $k\to\infty$, all finite values.*

The main (i.e., codimension-1) local bifurcations of symplectic maps are [27]:

(1) bifurcations of a fixed point with a double multiplier $(+1)$;

(2) bifurcations of a fixed point with a double multiplier $(-1)$;

(3) bifurcations of a fixed point with a double complex multiplier on the unit circle (i.e., with a quadruple of multipliers of the form $\nu_{1,2}=\nu_{3,4}=e^{\pm i\omega}$, $\omega\ne 0,\pi$), the so-called resonance $1:1$.

The bifurcation diagram for map (2.5) is shown in Fig. 2. There are five curves there (three bifurcation curves and two auxiliary ones). The curve

$$L^+:\ M_2=-(M_1-1)^2\tag{2.7}$$

corresponds to the bifurcation of the fixed point with a double multiplier $(+1)$. The curve

$$L^-:\ M_2=(M_1+1)(3M_1-1)\tag{2.8}$$

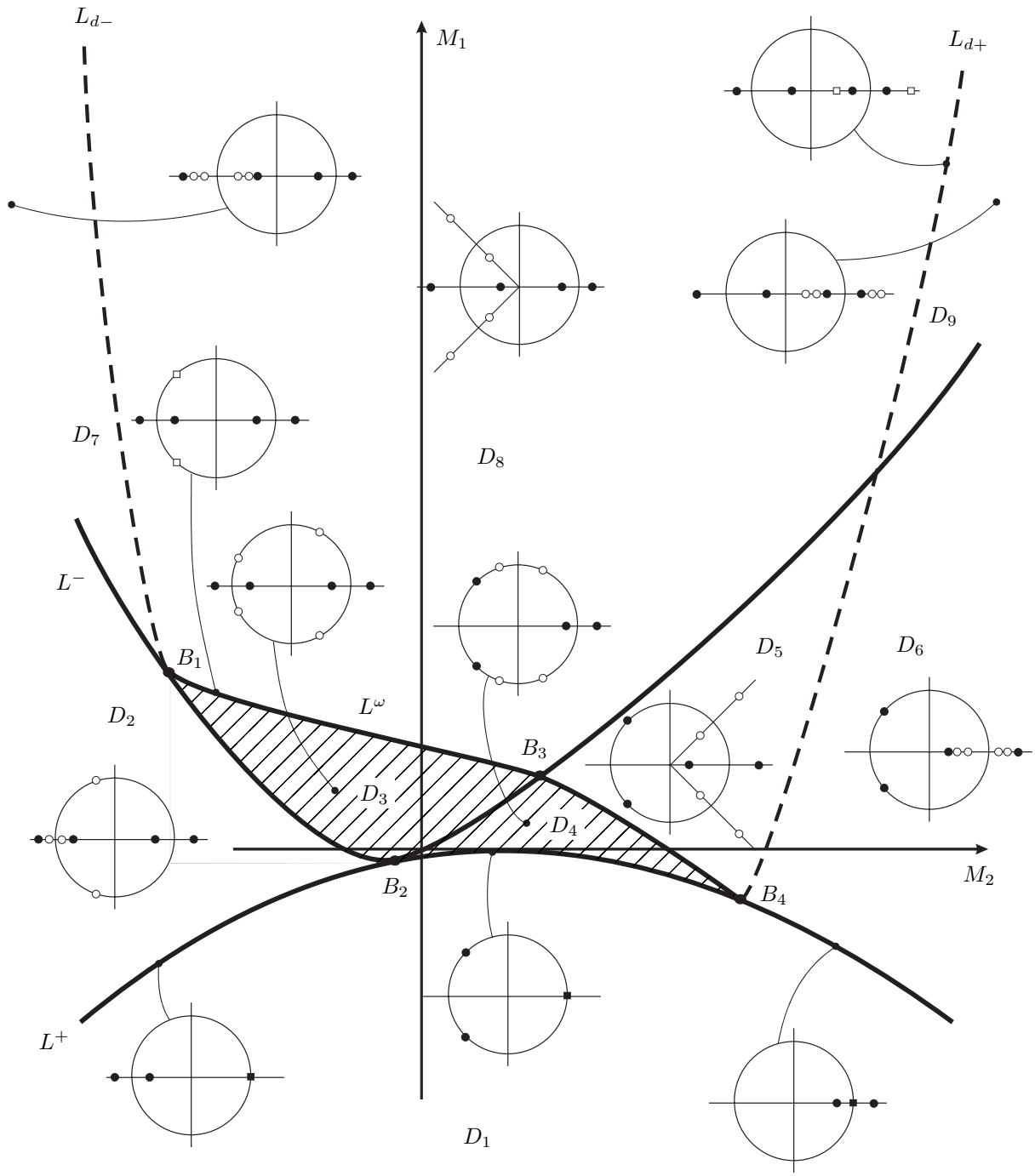


**Fig. 2.** *The bifurcation diagram for the fixed points of map* (2.5) *on the parameter plane* $(M_1, M_2)$. Bifurcation curves $L^+$, $L^-$, and $L^\omega$ that correspond to the existence of fixed points with double multipliers $+1$, $-1$, and $e^{\pm i\omega}$, respectively, and auxiliary (nonbifurcational) curves $L_{d+}$ and $L_{d-}$ that correspond to saddles with double real multipliers (positive and negative, respectively) divide the plane of parameters $(M_1, M_2)$ into nine regions. In the region $D_1$, map (2.5) has no fixed points. In the regions $D_2, \dots, D_9$, there exist exactly two fixed points. The type of the corresponding fixed points is indicated by showing the position of their multipliers with respect to the unit circle: bold points denote the multipliers of one of the points and small circles denote the multipliers of the other point; boxes correspond to double multipliers

corresponds to the bifurcation of the fixed point with a double multiplier $(-1)$. The curve

$$L^{\omega}\colon\ M_2 = \frac{1}{8}\left(1+\frac{M_1^2}{8}\right)(M_1^2 - 16M_1 + 24), \qquad |M_1| < 4, \tag{2.9}$$

corresponds to the bifurcation of the fixed point with double complex multipliers on the unit circle. Note that the same equation (2.9) with $|M_1| > 4$ defines the (nonbifurcational) curves $L_{d+}$ and $L_{d-}$ that correspond to the existence of a fixed point with double real multipliers $\nu_1 = \nu_2$ and $\nu_3 = \nu_4 = \nu_1^{-1}$. The curve $L_{d+}$ lies in the region $M_1 > 4$ and corresponds to positive $\nu_1$, and the curve $L_{d-}$ lies in the region $M_1 < -4$ and corresponds to negative $\nu_2$.

The plane of parameters $(M_1, M_2)$ is divided by the curves $L^+$, $L^-$, $L^{\omega}$, and $L_{d\pm}$ into nine regions $D_1, \dots, D_9$ (Fig. 2). For $(M_1, M_2)$ in the *region* $D_1$, map (2.5) has no fixed points. In the other regions, there exist exactly two fixed points of the following types.

*Region* $D_2$. A saddle $(+,-)$ (i.e., it has a pair of positive and a pair of negative real multipliers) and a saddle–center $(-)$ (i.e., a fixed point that has a pair of complex-conjugate multipliers on the unit circle and a pair of real negative multipliers).

*Region* $D_3$. A saddle $(+,-)$ and an elliptic point.

*Region* $D_4$. A saddle–center $(+)$ and an elliptic point.

*Region* $D_5$. A saddle–center $(+)$ and a saddle–focus.

*Region* $D_6$. A saddle $(+,+)$ and a saddle–center $(+)$.

*Region* $D_7$. A saddle $(+,-)$ and a saddle $(-,-)$.

*Region* $D_8$. A saddle $(+,-)$ and a saddle–focus.

*Region* $D_9$. A saddle $(+,-)$ and a saddle $(+,+)$.

Note also that there are four codimension-2 points on the bifurcation diagram: the point $B_1$, where map (2.5) has a fixed point with the multipliers $(-1,-1,-1,-1)$; the point $B_2$, where the map has a fixed point with the multipliers $(-1,-1,+1,+1)$; the point $B_4$, where the map has a fixed point with the multipliers $(+1,+1,+1,+1)$; and the point $B_3$, where one fixed point of map (2.5) has a double multiplier $(-1)$ and the other fixed point has double complex multipliers on the unit circle.

Note that, for the parameter values in the regions $D_3$ and $D_4$ (dashed curvilinear triangle in Fig. 2), map (2.5) has an elliptic fixed point. It was shown in [18] that the elliptic fixed point of (2.5) is generic for almost all parameter values from the region $D_3 \cup D_4$, with the possible exceptions of the parameter values that lie on some set of finitely many curves.

Recall that, in the coordinates of Lemma 3, the map $T_k$ is sufficiently close to (2.5) for large $k$. Therefore, the structure of the bifurcation diagram for the fixed points of the map $T_k$ is the same as that of the above-described bifurcation diagram for map (2.5). Thus, returning to the original parameters $(\mu, \varphi)$ by formulas (2.6), we obtain the following statement.

**Theorem 1.** *Let $F_{\mu\varphi}$ be a two-parameter family of diffeomorphisms that includes, at $\mu = 0$ and $\varphi = \varphi_0$, the diffeomorphism $F_0$ satisfying conditions* A *and* B. *In the plane of parameters $(\mu, \varphi)$, there exist eight infinite sequences of regions $\Delta_k^l$, $l = 2, \dots, 9$, that accumulate at the point $(\mu, \varphi) = (0, \varphi_0)$ and are such that the diffeomorphism $F_{\mu\varphi}$ has, for $(\mu, \varphi) \in \Delta_k^l$, two single-round periodic orbits of the same type as the fixed points of map* (2.5) *with $(M_1, M_2)$ from the region $D_l$. If $r \geq 7$ (where $r$ is the smoothness of the map $F_{\mu\varphi}$), then the regions $\Delta_k^3$ and $\Delta_k^4$ consist of a finite number of open regions such that $F_{\mu\varphi}$ has a generic elliptic single-round periodic orbit when $(\mu, \varphi)$ belongs to these regions.*

Note that systems in $\mathcal{H}$ (i.e., with $\mu = 0$) correspond, in general, to large (of order $\lambda^{-4k}$) values of $M_1$, while map (2.5) may have an elliptic fixed point only for a bounded interval of $M_1$. Thus, by an immediate computation, one can prove the following proposition.

**Proposition 1.** *If* $r_0 \equiv x_2^+(c_{12}d_{21} - c_{11}d_{22}) - y_1^- d_{21} - y_2^- d_{22} \neq 0$ *for the diffeomorphism* $F_0$, *then, for a sufficiently small and fixed neighborhood of the homoclinic orbit* $\Gamma$,

(1) *neither* $F_0$ *nor diffeomorphisms from* $\mathcal{H}$ *that are close to it may have single-round elliptic periodic orbits*;

(2) *no diffeomorphism close to* $F_0$ *may have more than one single-round elliptic periodic orbit.*

This fact is the main reason why we further consider double-round periodic orbits (for diffeomorphisms from $\mathcal{H}$). We prefer to do this not immediately but by analyzing double-round homoclinic tangencies.

## 3. SECONDARY HOMOCLINIC TANGENCIES FOR DIFFEOMORPHISMS FROM $\mathcal{H}$

The goal of this section is to establish the following result.

**Theorem 2.** *In the set of four-dimensional symplectic diffeomorphisms satisfying conditions* A *and* B, *those diffeomorphisms are dense that, along with the original orbit of homoclinic tangency* $\Gamma$, *have a double-round homoclinic orbit that corresponds to a simple tangency of the invariant manifolds of the saddle–focus* $O$.

Theorem 2 follows immediately from Theorem 2′, which we formulate below for one-parameter families of diffeomorphisms for which the original tangency is not split. Therefore, we will focus on the proof of Theorem 2′.

We will consider one-parameter families of diffeomorphisms in $\mathcal{H}$. Namely, let $F_0$ be a symplectic diffeomorphism satisfying conditions A and B, and let the following inequalities hold:

$$\alpha \neq \beta \qquad \text{and} \qquad \alpha \neq \beta \pm \pi,$$

where $\alpha$ and $\beta$ are the angles from (1.28). Embed $F_0$ in a one-parameter family $F_\varphi$ of diffeomorphisms in $\mathcal{H}$ (i.e., the original homoclinic tangency is not split). Let $\varphi$ vary in any interval $I = (\varphi_0 - \varepsilon_1, \varphi_0 + \varepsilon_1) \subset (0, \pi)$. The following theorem is valid.

**Theorem 2′.** *In* $I$, *the values of* $\varphi$ *are dense such that the corresponding diffeomorphism* $F_\varphi$ *has a double-round homoclinic orbit that corresponds to a simple tangency of the invariant manifolds of the saddle–focus* $O_\varphi$.

**Proof.** Since $x_1 = 0$ on $W^u_{\mathrm{loc}}$, we obtain from (1.27) that the equation of the two-dimensional surface $T_1(W^u_{\mathrm{loc}}) \cap \Pi^+$ can be written in an implicit form as follows:

$$\begin{aligned} x_{01} - x_1^+ &= -\frac{1}{c_{11}}(y_{11} - y_1^-) + \frac{b_{12}}{d_{22}} y_{02} + O\big[(|y_{02}| + |y_{11} - y_1^-|)^2\big], \\ x_{02} - x_2^+ &= \frac{b_{22}}{d_{22}} y_{02} + O\big[(|y_{02}| + |y_{11} - y_1^-|)^2\big], \\ y_{01} &= D_0(y_{11} - y_1^-)^2 + \widetilde{D}_2(y_{11} - y_1^-)y_{02} + \widetilde{D}_3 y_{02}^2 + O\big[(|y_{02}| + |y_{11} - y_1^-|)^3\big], \end{aligned} \tag{3.1}$$

where $(y_{11} - y_1^-)$ is the coordinate on $W^u_{\mathrm{loc}} \cap \Pi^-$; i.e., it runs through the interval $|y_{11} - y_1^-| \leq \delta_0$.

The strip $\sigma_k^0 \subset \Pi^+$, the domain of definition of the map $T_0^k \colon \Pi^+ \to \Pi^-$, is defined by inequalities (2.2). Hence, the intersection $T_1(W^u_{\mathrm{loc}}) \cap \sigma_k^0$ is defined by system (3.1) under the condition that the coordinates $y_{01}$ and $y_{02}$ in (3.1) satisfy the inequalities

$$|y_{01} - \lambda^k A \cos(k\varphi - \alpha)| \leq \lambda^k \delta_0, \qquad |y_{02} + \lambda^k A \sin(k\varphi - \alpha)| \leq \lambda^k \delta_0, \tag{3.2}$$

where the coefficients $A$ and $\alpha$ are defined by (1.28).

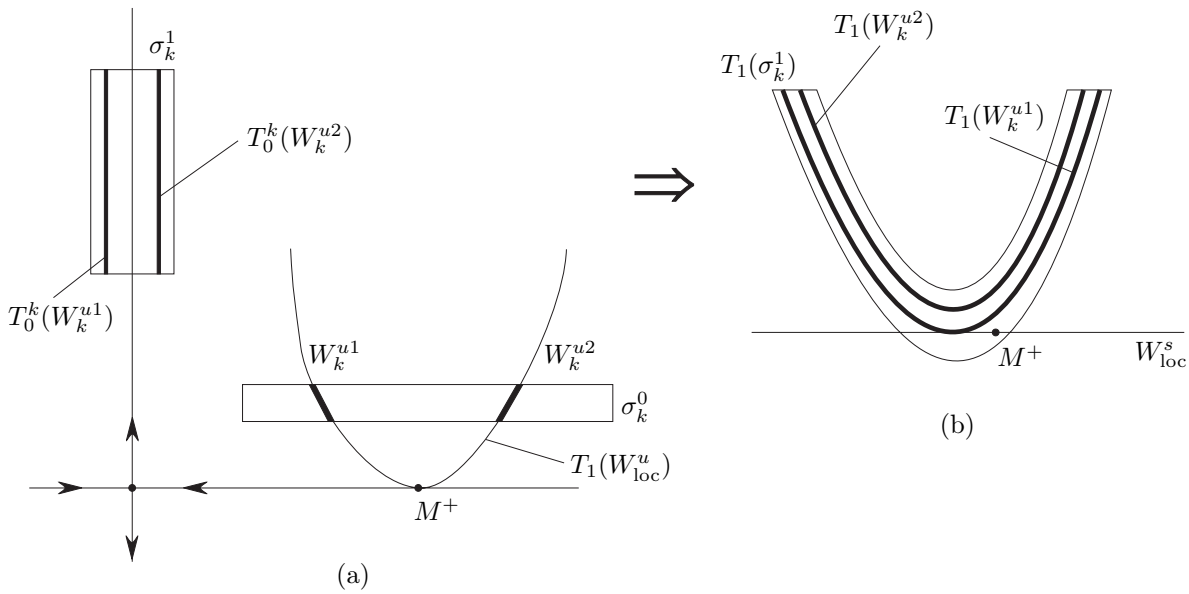


**Fig. 3.** *Schematic illustration to Theorem 2′: formation of double-round homoclinic tangencies of the first type.* (a) The intersection of $T_1(W_{\rm loc}^u(O))$ with $\sigma_k^0$ consists of two connected components $W_k^{u1}$ and $W_k^{u2}$. (b) The intersection of the horseshoe $T_1(\sigma_k^1)$ with the piece $W_{\rm loc}^s$ of the stable manifold of $O$ consists of one component. In this case, either $T_1T_0^k(W_k^{u1})$ or $T_1T_0^k(W_k^{u2})$ may have a tangency with $W_{\rm loc}^s(O)$

It follows from the third equation in (3.1) that if $k$ is sufficiently large and if the inequality

$$A\cos(k\varphi-\alpha)<-\delta_1 \tag{3.3}$$

holds with some fixed $\delta_1>\delta_0$, then the surface $T_1(W_{\rm loc}^u)$ does not intersect the strip $\sigma_k^0$: when (3.3) holds, the left- and right-hand sides of the third equation in (3.1) have different signs (recall that $D_0>0$). On the contrary, if $k$ satisfies the inequality

$$A\cos(k\varphi-\alpha)>\delta_1, \tag{3.4}$$

the surface $T_1(W_{\rm loc}^u)$ intersects the strip $\sigma_k^0$ twice; we denote the two connected components of the intersection by $W_k^{u1}$ and $W_k^{u2}$ (Fig. 3a). Each of this components can be defined by an explicit expression. Namely, the third equation of (3.1) can be resolved with respect to $y_{11}$ in the following way:

$$y_{11}-y_1^-=-\frac{\widetilde{D}_2}{2D_0}y_{02}(1+\dots)+(-1)^{l+1}\frac{1}{\sqrt{D_0}}\sqrt{y_{01}-(\widetilde{D}_3-\widetilde{D}_2^2/4D_0)y_{02}^2+\dots}\equiv\Phi_l(y_{01},y_{02}), \tag{3.5}$$

$l=1,2$. Since we assume that inequality (3.4) holds, the expression under the square-root sign is, by virtue of (3.2), positive for sufficiently large $k$. Hence, the function $\Phi_l(y_{01},y_{02})$ is smooth (of the same smoothness as the right-hand side in (3.1); i.e., it is at least $C^{r-2}$ with respect to all variables and parameters). Let us fix $l=1$ for definiteness; i.e., we will deal with the component $W_k^{u1}$. Accordingly, we omit the index "1," assuming now that $W_k^{u1}\equiv W_k^u$, $\Phi_1\equiv\Phi$, etc. For the component $W_k^{u2}$, all the construction remains the same.

We obtain from (3.1) and (3.5) that the surface $W_k^u$ is given by the system of equations

$$\begin{aligned}x_{01}-x_1^+&=-\frac{1}{c_{11}}\Phi(y_{01},y_{02})+\frac{b_{12}}{d_{22}}y_{02}+O\big[(|y_{02}|+|\Phi(y_{01},y_{02})|)^2\big],\\ x_{02}-x_2^+&=\frac{b_{22}}{d_{22}}y_{02}+O\big[(|y_{02}|+|\Phi(y_{01},y_{02})|)^2\big],\end{aligned} \tag{3.6}$$

where the range of values of the coordinates $y_{01}$ and $y_{02}$ is given by inequalities (3.2).

The map $T_0^k$ takes the surface $W_k^u$ into the two-dimensional surface $T_0^k(W_k^u)$ lying in the vertical strip $\sigma_k^1 \subset \Pi^-$. Let us show that $T_0^k(W_k^u)$ is given by the equations

$$\begin{aligned} \overline{x}_{11} &= \lambda^k \cos k\varphi \cdot x_1^+ - \lambda^k \sin k\varphi \cdot x_2^+ + \lambda^k \phi_k^1(\overline{y}_{11}, \overline{y}_{12}), \\ \overline{x}_{12} &= \lambda^k \cos k\varphi \cdot x_2^+ + \lambda^k \sin k\varphi \cdot x_1^+ + \lambda^k \phi_k^2(\overline{y}_{11}, \overline{y}_{12}), \end{aligned} \tag{3.7}$$

where $(\overline{x}_1, \overline{y}_1)$ are the coordinates on $\Pi^-$ (i.e., $\|\overline{y}_1 - y^-\| \le \delta_0$, in particular) and the functions $\phi_k^{1,2}$ are small along with their derivatives up to the second order. Indeed, by (1.6), we have the following relations for $T_0^k(W_k^u)$:

$$\begin{aligned} \overline{x}_{11} &= \lambda^k \cos k\varphi \cdot x_{01} - \lambda^k \sin k\varphi \cdot x_{02} + k\lambda^{2k} P_k^1(x_0, \overline{y}_1) x_0, \\ \overline{x}_{12} &= \lambda^k \cos k\varphi \cdot x_{02} + \lambda^k \sin k\varphi \cdot x_{01} + k\lambda^{2k} P_k^2(x_0, \overline{y}_1) x_0, \end{aligned} \tag{3.8}$$

where $(x_{01}, x_{02})$ are defined by (3.6) as functions of the coordinates $(y_{01}, y_{02})$ which, in turn, are defined as follows:

$$\begin{aligned} y_{01} &= \lambda^k \cos k\varphi \cdot \overline{y}_{11} + \lambda^k \sin k\varphi \cdot \overline{y}_{12} + k\lambda^{2k} Q_k^1(x_0, \overline{y}_1) \overline{y}_1, \\ y_{02} &= \lambda^k \cos k\varphi \cdot \overline{y}_{12} - \lambda^k \sin k\varphi \cdot \overline{y}_{11} + k\lambda^{2k} Q_k^2(x_0, \overline{y}_1) \overline{y}_1, \end{aligned} \tag{3.9}$$

and $\|\overline{y}_1 - y^-\| \le \varepsilon_0$. It is now immediately seen that the equations for $T_0^k(W_k^u)$ can indeed be written in the form (3.7) with

$$\phi_k^{1,2}(y_{11}, y_{12}) = O(|\Phi(y_{01}, y_{02})| + k\lambda^k) \tag{3.10}$$

and $y_{01}$ and $y_{02}$ satisfy (3.9). From (3.10), using (3.4), (3.5), and (3.9), we obtain the following estimate:

$$\|\phi_k\| \le C_1 k\lambda^k + \sqrt{\frac{1}{D_0}} \sqrt{\frac{\delta_1}{2}\lambda^k - C_2\lambda^{2k}} \le C_3 \sqrt{\delta_1} \lambda^{k/2}, \tag{3.11}$$

where $C_1$, $C_2$, and $C_3$ are some positive constants and $\delta_1$ is taken from (3.4). Next, we have

$$\begin{aligned} \left\| \frac{\partial \phi_k^l}{\partial \overline{y}_{11}, \partial \overline{y}_{12}} \right\| &\le \frac{1}{2\sqrt{D_0}} \left( y_{01} - \left( \widetilde{D}_2 - \frac{\widetilde{D}_3^2}{4D_0} \right) y_{02}^2 + \dots \right)^{-1/2} \left\| \frac{\partial y_0}{\partial \overline{y}_1} \right\| \\ &\le C_4 \lambda^k \left( \lambda^k \frac{\delta_1}{2} \right)^{-1/2} \le C_5 \delta_1^{-1/2} \lambda^{k/2}. \end{aligned} \tag{3.12}$$

Analogously, we obtain the inequality

$$\left\| \frac{\partial^2 \phi_k^l}{\partial y_{11}^p \partial y_{12}^{2-p}} \right\| \le C_6 \delta_1^{-3/2} \lambda^{k/2}, \tag{3.13}$$

where $p \in \{0, 1, 2\}$.

These three inequalities and (3.7) imply that

*for those $k$ for which inequality* (3.4) *holds, the surfaces $T_0^k(W_k^u)$ accumulate, as $k \to \infty$, on $(W_{\mathrm{loc}}^u \cap \Pi^-) = \{x_{11} = 0, x_{12} = 0\}$ in the $C^2$-topology.*

Thus, it follows that, for all sufficiently large $k$ satisfying (3.4), when the surface $T_1T_0^k(W_k^u)$ is tangent to the surface $W^s_{\mathrm{loc}}\cap\Pi^+$, this tangency will satisfy conditions B.1 and B.2, just as the original homoclinic tangency of $T_1(W^u_{\mathrm{loc}})$ and $W^s_{\mathrm{loc}}$ does. Let us prove that the tangency of such type indeed exists for a dense set of values of $\varphi$.

According to (1.27) and (3.7), the equation of $T_1T_0^k(W_k^u)$ can be written in the form

$$\begin{aligned}
\overline{\overline{x}}_{01}-x_1^+&=\lambda^k\xi^*_{k1}(\varphi)-\frac{1}{c_{11}}(\overline{y}_{11}-y_1^-)+\overline{\overline{y}}_{02}\frac{b_{12}}{d_{22}}+O\Big[\lambda^k(|\overline{\overline{y}}_{02}|+|\overline{y}_{11}-y_1^-|)(|\overline{\overline{y}}_{02}|+|\overline{y}_{11}-y_1^-|)^2\Big],\\
\overline{\overline{x}}_{02}-x_2^+&=\lambda^k\xi^*_{k2}(\varphi)+\frac{b_{22}}{d_{22}}\overline{\overline{y}}_{02}+O\Big[\lambda^k(|\overline{\overline{y}}_{02}|+|\overline{y}_{11}-y_1^-|)(|\overline{\overline{y}}_{02}|+|\overline{y}_{11}-y_1^-|)^2\Big],\\
\overline{\overline{y}}_{01}&=M_k(\varphi)+D_0(\overline{y}_{11}-y_1^-)^2+\widetilde{D}_2(\overline{y}_{11}-y_1^-)\overline{\overline{y}}_{02}+\widetilde{D}_3\overline{\overline{y}}_{02}^2\\
&\quad+O\Big[\lambda^k(|\overline{\overline{y}}_{02}|+|\overline{y}_{11}-y_1^-|)(|\overline{\overline{y}}_{02}|+|\overline{y}_{11}-y_1^-|)^3\Big],
\end{aligned}\tag{3.14}$$

where $\xi^*_{k1}$ and $\xi^*_{k2}$ are constant (independent of the coordinates) terms, uniformly bounded for all $k$. The constant term in the third equation of (3.14) is written as

$$M_k(\varphi)=B\lambda^k\cos(k\varphi-\beta)+O(\lambda^{3k/2}),\tag{3.15}$$

where the coefficients $B$ and $\beta$ are given by (1.28). Note that formulas (3.14) and (3.15) hold true only for those $k$ for which (3.4) holds with $\delta_1$ bounded away from zero, because the constant factors in the $O(\cdot)$-terms may depend on $\delta_1$ (see (3.11)–(3.13)).

Let us now write system (3.14) in an explicit form, resolving the first equation with respect to $(y_{11}-y_1^-)$. We obtain the following equations for the surface $T_1T_0^k(W_k^u)$ (to simplify the notation, we remove bars from $x$ and $y$):

$$\begin{aligned}
x_{02}-x_2^+&=O(\lambda^k)+O(y_{02}),\\
y_{01}&=\widehat{M}_k(\varphi)+D_0c_{11}^2(x_{01}-x_1^+-\lambda^k\widehat{\xi}_k)^2(1+O[x_{01}-x_1^+-\lambda^k\widehat{\xi}_k])+O(y_{02}),
\end{aligned}\tag{3.16}$$

where $\widehat{\xi}_k$ is a bounded coefficient (close to $\xi^*_{k1}$) and $\widehat{M}_k(\varphi)$ is a new constant term in the equation for $y_{01}$, which still satisfies (3.15) (for this reason, we will further denote this term simply by $M_k(\varphi)$).

It is obvious that one can introduce local coordinates

$$\begin{gathered}
\xi_1=x_{01}-x_1^+-O(\lambda^k)-O(y_{02}),\qquad \xi_2=(x_{02}-x_2^+-\lambda^k\widehat{\xi}_k)(1+\ldots),\\
\eta_1=y_{01}-O(y_{02}),\qquad \eta_2=y_{02}
\end{gathered}\tag{3.17}$$

in a neighborhood of the point

$$(x_{01}=x_1^++\lambda^k\widehat{\xi}_k,\ x_{02}=x_2^+,\ y_{01}=0,\ y_{02}=0),$$

such that system (3.16) is rewritten as

$$\xi_2=0,\qquad \eta_1=M_k(\varphi)+D_0c_{11}^2\xi_1^2.\tag{3.18}$$

These equations define the piece $T_1T_0^k(W_k^u)$ of the unstable manifold of $O$ in coordinates (3.17). In the same coordinates, the piece $W^s_{\mathrm{loc}}\cap\Pi^+$ of the stable manifold of $O$ has the form $\eta_1=\eta_2=0$ (this corresponds to $y_{01}=y_{02}=0$ in the old coordinates).

Since $D_0\neq 0$ and $c_{11}\neq 0$, the two-dimensional surfaces $T_1T_0^k(W_k^u)$ and $W^s_{\mathrm{loc}}\cap\Pi^+$ have a quadratic tangency at the point $(\xi,\eta)=0$ for $M_k(\varphi)=0$; they do not have intersections for $M_k(\varphi)>0$ and have two intersection points for $M_k(\varphi)<0$. It is obvious that the quantity $M_k(\varphi)$ serves as a splitting parameter for the given tangency.

Thus, the diffeomorphism $F_\varphi$ has a double-round homoclinic orbit corresponding to a simple tangency of $W^u$ and $W^s$ if $M_k(\varphi) = 0$. By (3.15), this condition can be written as

$$\varphi = \varphi_{kj}^{\pm} = \pm\frac{\pi}{2k} + \frac{\beta}{k} + 2\pi\frac{j}{k} + O(\lambda^{k/2}), \tag{3.19}$$

where $j$ runs through arbitrary integer values. By construction, the sought-for homoclinic tangency corresponds to those values of $\varphi = \varphi_{kj}^{\pm}$ that satisfy inequality (3.4). When $\varphi$ is given by (3.19), inequality (3.4) reduces to

$$\pm A\sin(\alpha - \beta) > \delta_1 + O(\lambda^{k/2}).$$

It is clear that an appropriate $\delta_1 > \delta_0$, independent of $k$, always exists, provided $\sin(\alpha - \beta) \neq 0$. Thus, the sought-for homoclinic tangency corresponds to the values $\varphi_{kj}^{+}$ of $\varphi$ in the case $\sin(\alpha-\beta) > 0$ and to the values $\varphi_{kj}^{-}$ in the case $\sin(\alpha - \beta) < 0$. Since both sequences $\varphi_{kj}^{+}$ and $\varphi_{kj}^{-}$ are dense in any interval, this completes the proof of Theorem 2′. $\square$

Analogous computations for the second component $W_k^{u2}$ of the intersection $T_1(W_{\mathrm{loc}}^u) \cap \sigma_k^0$ (see (3.5)) show that the homoclinic tangency of the surface $T_1T_0^k(W_k^{u2})$ with $W_{\mathrm{loc}}^s$ exists for the values of $\varphi$ that also satisfy the asymptotic relations (3.19). Hence, if $\sin(\alpha - \beta) \neq 0$, there exist two sequences $\varphi = \varphi_{kj}^{(1)}$ and $\varphi = \varphi_{kj}^{(2)}$ corresponding to a simple double-round homoclinic tangency. Recall that

$$\varphi_{kj}^{(1,2)} = \begin{cases} \dfrac{\pi}{2k} + \dfrac{\beta}{k} + 2\pi\dfrac{j}{k} + O(\lambda^{k/2}) & \text{when } \sin(\alpha - \beta) > 0, \\ -\dfrac{\pi}{2k} + \dfrac{\beta}{k} + 2\pi\dfrac{j}{k} + O(\lambda^{k/2}) & \text{when } \sin(\alpha - \beta) < 0, \end{cases} \tag{3.20}$$

where $j$ and $k$ run through arbitrary integer numbers such that $\varphi_{kj}^{(1,2)} \in I$ (we must also require that $k$ is sufficiently large and positive).

It follows from (3.20) that there exist, in fact, two more series of homoclinic tangencies. Namely, the corresponding values of $\varphi$ are given by the formula

$$\varphi = \widetilde{\varphi}_{kj}^{(1,2)} = \begin{cases} \dfrac{\pi}{2k} + \dfrac{\alpha}{k} + 2\pi\dfrac{j}{k} + O(|\lambda|^{k/2}) & \text{when } \sin(\alpha - \beta) < 0, \\ -\dfrac{\pi}{2k} + \dfrac{\alpha}{k} + 2\pi\dfrac{j}{k} + O(|\lambda|^{k/2}) & \text{when } \sin(\alpha - \beta) > 0, \end{cases} \tag{3.21}$$

where $j$ and $k$ run through the integer values such that $\widetilde{\varphi}_{kj}^{(1,2)} \in I$ (both sequences $\widetilde{\varphi}_{kj}^{(1)}$ and $\widetilde{\varphi}_{kj}^{(2)}$ are dense in $I$).

Indeed, as it follows from (1.29), formula (3.20) transforms into (3.21) if one considers the diffeomorphism $F^{-1}$ instead of $F$.

Thus, when studying double-round homoclinic tangencies, we have two different cases: $\sin(\alpha - \beta) > 0$ and $\sin(\alpha - \beta) < 0$. In both cases, for one-parameter families $F_\varphi \subset \mathcal{H}$, there are four sequences of values of the parameter $\varphi$ that correspond to homoclinic tangencies. These sequences are given by formulas (3.20) and (3.21).

Note that we have two types of homoclinic tangencies here. The tangencies of the first type correspond to $\varphi$ given by (3.20), and the tangencies of the second type correspond to $\varphi$ from (3.21). The difference is clearly seen in Figs. 3 and 4, where we present a two-dimensional schematic diagram for the behavior of the stable and unstable manifolds of the saddle–focus. In the first case (Fig. 3), we obtain a double-round homoclinic tangency as a result of the following disposition of invariant manifolds, strips and horseshoes: the intersection of the piece $T_1(W_{\mathrm{loc}}^u)$ of the unstable manifold of $O$ with the strip $\sigma_k^0$ is regular: it consists of two connected components $W_k^{u1}$ and $W_k^{u2}$; while the

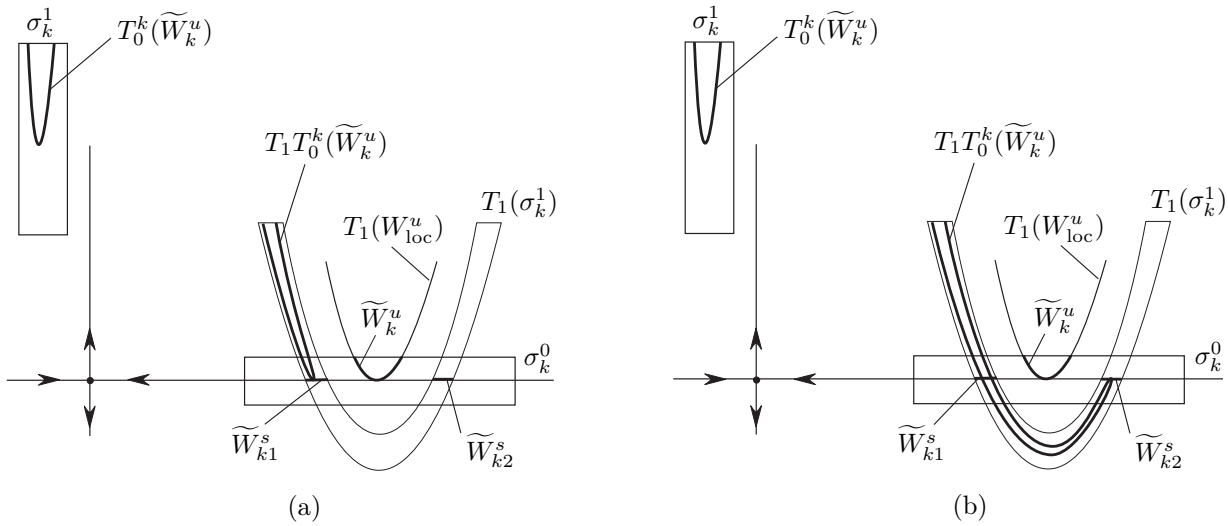


**Fig. 4.** *Schematic illustration of the formation of double-round homoclinic tangencies of the second type.* The intersection of the piece $T_1(W_{\rm loc}^u)$ with $\sigma_k^0$ consists of a single connected component $\widetilde{W}_k^u$, while the intersection of $T_1(\sigma_k^1)$ with $W_{\rm loc}^s$ consists of two segments $\widetilde{W}_{k1}^s$ and $\widetilde{W}_{k2}^s$. Double-round homoclinic tangencies of the second type correspond to the tangency of the surface $T_1T_0^k(\widetilde{W}_k^u)$ either (a) with $\widetilde{W}_{k1}^s$ or (b) with $\widetilde{W}_{k2}^s$

intersection of the horseshoe $T_1(\sigma_k^1)$ with the piece $W_{\rm loc}^s$ of the stable manifold of $O$ is irregular and consists of a single component. Therefore, either $T_1T_0^k(W_k^{u1})$ or $T_1T_0^k(W_k^{u2})$ may have a tangency with $W_{\rm loc}^s$ in this case, which corresponds to the tangency of the first type. It is exactly this type of tangency the existence of which we established in the proof of the theorem. In the second case (Fig. 4), we have the following geometry: the intersection of the piece $T_1(W_{\rm loc}^u)$ of the unstable manifold of $O$ with the strip $\sigma_k^0$ is irregular and consists of a single component $\widetilde{W}_k^u$, while the intersection of the horseshoe $T_1(\sigma_k^1)$ with the piece $W_{\rm loc}^s$ of the stable manifold of $O$ is regular and consists of two segments $\widetilde{W}_{k1}^s$ and $\widetilde{W}_{k2}^s$. The double-round homoclinic tangencies of the second type correspond here to the tangency of the surface $T_1T_0^k(\widetilde{W}_k^u)$ either with $\widetilde{W}_{k1}^s$ (Fig. 4a) or with $\widetilde{W}_{k2}^s$ (Fig. 4b). Formally speaking, the proof of the existence of homoclinic tangencies of the second type and of their quadraticity for the diffeomorphism $F$ requires a method different from that we used for the tangencies of the first type. We, however, noticed that a tangency of the second type becomes a tangency of the first type for the diffeomorphism $F^{-1}$; the denseness in $\mathcal{H}$ of the diffeomorphisms with double-round homoclinic tangencies of the second type follows automatically, by virtue of the natural symmetry between the symplectic maps $F$ and $F^{-1}$ (see (1.29)).

## 4. PROOF OF THE MAIN THEOREM AND SOME COROLLARIES

First, note that, when proving Theorem $2'$, we not only showed that diffeomorphisms with double-round homoclinic tangencies are dense but also determined the families in $\mathcal{H}$ where these tangencies are split in a generic way. Namely, the splitting parameter here is either (see (3.18) and (3.15)) the quantity

$$M_k(\varphi) \sim \lambda^k \cos(k\varphi - \beta) + O(\lambda^{3k/2})$$

for the homoclinic tangencies of the first type, which correspond to the values of $\varphi$ given by (3.20), or the symmetric quantity

$$\widetilde{M}_k(\varphi) \sim \lambda^k \cos(k\varphi - \alpha) + O(\lambda^{3k/2})$$

for the homoclinic tangencies of the second type, which correspond to the values of $\varphi$ from (3.21). Hence, in any two-parameter family $F_{\nu\varphi}$ of diffeomorphisms from $\mathcal{H}$ for which inequality (3) holds (i.e., either $\alpha'_\nu \neq 0$ or $\beta'_\nu \neq 0$; see the Introduction), the tangencies of at least one of these two types will split generically (for all sufficiently large $k$) for arbitrarily small variations of $\nu$ and fixed values of $\varphi$. This means that Theorems $2'$ and 1 apply to these families. Thus, applying Theorem 1 to a double-round homoclinic tangency gives us the existence of (eight) regions in the plane of parameters $(\nu, \varphi)$ near the point corresponding to the given secondary tangency for which the diffeomorphism has periodic orbits of different types. These periodic orbits are double-round in $U$ (they are single-round with respect to a small neighborhood of the secondary homoclinic tangency). We see that, in the analysis of homoclinic bifurcations in the class of diffeomorphisms from $\mathcal{H}$, it is natural to take $\varphi$ and $\beta$ or $\varphi$ and $\alpha$ as the governing parameters. For definiteness, we will consider below two-parameter families of diffeomorphisms from $\mathcal{H}$ that are parametrized by $\varphi$ and $\beta$.

Let $F_0$ be a symplectic diffeomorphism satisfying conditions A and B, and let the inequalities $\alpha \neq \beta$ and $\alpha \neq \beta \pm \pi$ hold. Consider a two-parameter family $F_{\varphi,\beta}$ of diffeomorphisms from $\mathcal{H}$ such that the range of values of $\varphi$ contains an interval $I_0 = (\varphi_0 - \nu_0, \varphi_0 + \nu_0)$ and the range of values of $\beta$ contains an interval $B_0 = (\beta_0 - \nu_1, \beta_0 + \nu_1)$, where $\nu_0$ and $\nu_1$ are sufficiently small. Denote $J = I_0 \times B_0$. Let us show that, in $J$, there exists a dense subset $\widetilde{J}$ such that if $(\varphi, \beta) \in \widetilde{J}$, then the diffeomorphism $F_{\varphi,\beta}$ has, simultaneously, infinitely many (double-round) periodic orbits of all generic types (saddle, saddle–center, and elliptic). This will give us the main theorem.

We will prove the theorem by the embedded domains method. Take any point $P_1 \in J$. Let $\Delta_0$ be its small neighborhood in $J$. By Theorem $2'$, there exists a point $\widetilde{P}_1 = (\varphi_0^1, \beta_0^1)$ in $\Delta_0$ such that the diffeomorphism $F_{\varphi_0^1,\beta_0^1}$ has a double-round orbit of homoclinic tangency $\Gamma_{i_0}$. By Theorem 1, the point $\widetilde{P}_1$ is the limit of a sequence of regions $\Delta_k^l(\widetilde{P}_1)$ in the plane of parameters $\varphi$ and $\beta$ which correspond to the existence of double-round periodic orbits of the same type as the fixed points in the parameter regions $D_l$, $l = 2, \dots, 9$, for map (2.5). Consider a region $\Delta_k^2(\widetilde{P}_1) \subset \Delta_0$. Here, the diffeomorphism $F_{\varphi,\beta}$ has two periodic orbits of the saddle $(+,-)$ and saddle–center $(-)$ types. In the region $\Delta_k^2$, we again find a point $\widetilde{P}_1^{(2)}$ such that the corresponding diffeomorphism $F_{\varphi,\beta}$ has a double-round orbit of homoclinic tangency $\Gamma_{i_1}$. Near this point, we find a region $\Delta_{k_1}^3(\widetilde{P}_1^{(2)}) \subset \Delta_k^2(\widetilde{P}_1) \subset \Delta_0$ such that, when the parameters belong to this region, the diffeomorphism $F_{\varphi,\beta}$ has, along with the previously constructed saddle $(+,-)$ and saddle–center $(-)$ periodic orbits, two new periodic orbits: a new saddle $(+,-)$ and an elliptic orbit. Inside $\Delta_{k_1}^3$, we find again a point $\widetilde{P}_1^{(3)}$ corresponding to a new double-round homoclinic tangency and a region $\Delta_{k_2}^4(\widetilde{P}_1^{(3)})$, and so on, until we construct a region $\Delta_{k_7}^9(\widetilde{P}_1^{(8)})$. For $(\varphi, \beta) \in \Delta_{k_7}^9$, the diffeomorphism $F_{\varphi,\beta}$ has, by construction, double-round periodic orbits of "all types." Now, we repeat this procedure infinitely many times. We obtain a sequence

$$\Delta_{k_7}^9 \supset \Delta_{k_7^1}^9 \supset \dots \supset \Delta_{k_7^n}^9 \supset \dots$$

of nested regions. For a point of intersection of these regions $P^* = (\varphi^*, \beta^*) \in \Delta_0$, the diffeomorphism $F_{\varphi^*,\beta^*}$ has infinitely many double-round periodic orbits of all types. Since the original point $P_1$ is chosen arbitrarily and the point $P^*$ is found in an arbitrarily small neighborhood of $P_1$, this completes the proof of the theorem. $\square$

Let us now discuss some generalizations of the main theorem. Recall that Theorem 1 from Section 2 is proven by analyzing the fixed points of the first-return maps near the orbit of homoclinic tangency. The main result here is Lemma 3, which says that the first-return map is sufficiently close, in specially chosen coordinates $(X_1, X_2, Y_1, Y_2)$, to the quadratic map (2.5), where the coordinates $(X, Y)$ and the parameters $M_2$ and $M_1$ can take arbitrary finite values (actually, these are the small parameters that govern the splitting of the tangency and the variation of $\varphi$, divided by some small factors so that the range of their values becomes large; see (2.6)). We call a quadruple of nonzero

complex numbers $(\lambda_1, \lambda_2, \lambda_3, \lambda_4)$ *symplectic* if it is invariant (up to a permutation) with respect to both inversion $(\lambda_1, \lambda_2, \lambda_3, \lambda_4) \to (\lambda_1^{-1}, \lambda_2^{-1}, \lambda_3^{-1}, \lambda_4^{-1})$ and complex conjugation $(\lambda_1, \lambda_2, \lambda_3, \lambda_4) \to (\lambda_1^*, \lambda_2^*, \lambda_3^*, \lambda_4^*)$. It is well known that the multipliers of a periodic point of a real four-dimensional symplectic map always form a symplectic quadruple. It is easy to verify that, when the parameters $M_1$ and $M_2$ vary, the multipliers of the fixed points of the map (2.5) may run through all symplectic quadruples. Hence, due to the closeness of the first-return maps to map (2.5), we immediately obtain the following result (an analogue of Theorem 1).

**Theorem 3.** *Let $F_{\mu\varphi}$ be a two-parameter family of diffeomorphisms that includes, at $\mu = 0$ and $\varphi = \varphi_0$, a diffeomorphism $F_0$ satisfying conditions* A *and* B. *Let $\mu$ be a splitting parameter for the invariant manifolds of the saddle–focus near a point of homoclinic tangency and $\varphi$ be an angular argument of the multipliers of the saddle–focus. For any symplectic quadruple $(\lambda_1, \lambda_2, \lambda_3, \lambda_4)$, in any neighborhood of the point $\mu = 0$, $\varphi = \varphi_0$ in the plane of parameters $(\mu, \varphi)$, there exist parameter values for which the corresponding diffeomorphism has, in a small neighborhood of the orbit of homoclinic tangency, a single-round periodic orbit with the multipliers $(\lambda_1, \lambda_2, \lambda_3, \lambda_4)$.*

Based on this result and on Theorem $2'$ and using exactly the same construction with nested domains as in the proof of the main theorem, we obtain the following generalization of the latter.

**Theorem 4.** *For any two-parameter family $F_{\nu\varphi}$ of diffeomorphisms in $\mathcal{H}$ that satisfies* (2) *and* (3), *those values of the parameters are dense for which the corresponding diffeomorphism has an infinite set of double-round periodic orbits whose sets of multipliers form a dense subset in the set of all symplectic quadruples.*

## ACKNOWLEDGMENTS

This work was supported by the Russian Foundation for Basic Research (project nos. 02-01-00273 and 01-01-00975), by the INTAS (project no. 2000-221), by the DFG (grant no. 436 RUS), and by the scientific program "Russian Universities" (project no. 1905). The second author acknowledges the support of the Alexander von Humboldt Foundation.

## REFERENCES

1. S. V. Gonchenko, D. V. Turaev, and L. P. Shilnikov, "Dynamical Phenomena in Multidimensional Systems with a Structurally Unstable Homoclinic Poincare Curve," Dokl. Akad. Nauk **330** (2), 144–147 (1993) [Dokl. Math. **47** (3), 410–415 (1993)].
2. S. V. Gonchenko, L. P. Shilnikov, and D. V. Turaev, "Dynamical Phenomena in Systems with Structurally Unstable Poincare Homoclinic Orbits," Chaos **6** (1), 15–31 (1996).
3. S. V. Gonchenko, D. V. Turaev, and L. P. Shilnikov, "On Newhouse Domains of Two-Dimensional Diffeomorphisms that Are Close to a Diffeomorphism with a Structurally Unstable Heteroclinic Cycle," Tr. Mat. Inst. im. V.A. Steklova, Ross. Akad. Nauk **216**, 76–125 (1997) [Proc. Steklov Inst. Math. **216**, 70–118 (1997)].
4. N. K. Gavrilov and L. P. Shilnikov, "On Three-Dimensional Dynamical Systems Close to a System with a Structurally Unstable Homoclinic Curve. I, II," Mat. Sb. **88** (4), 475–492 (1972) [Math. USSR Sb. **17**, 467–485 (1973)]; Mat. Sb. **90** (1), 139–157 (1973) [Math. USSR Sb. **19**, 139–156 (1974)].
5. S. E. Newhouse, "Diffeomorphisms with Infinitely Many Sinks," Topology **13**, 9–18 (1974).
6. S. V. Gonchenko, "On Stable Periodic Motions in Systems Close to a System with Structurally Unstable Homoclinic Curve," Mat. Zametki **33** (5), 745–755 (1983) [Math. Notes **33**, 384–389 (1983)].
7. D. V. Turaev, "On Dimension of Nonlocal Bifurcational Problems," Int. J. Bifurcation Chaos Appl. Sci. Eng. **6** (5), 919–948 (1996).
8. S. Smale, "Diffeomorphisms with Many Periodic Points," in *Differential and Combinatorial Topology* (Princeton Univ. Press, Princeton, 1965), pp. 63–80.
9. L. P. Shilnikov, "On a Poincare–Birkhoff Problem," Mat. Sb. **74** (4), 378–397 (1967) [Math. USSR Sb. **3**, 353–371 (1967)].
10. L. P. Shilnikov, A. L. Shilnikov, D. V. Turaev, and L. O. Chua, *Methods of Qualitative Theory in Nonlinear Dynamics*, Part 1 (World Sci., Singapore, 1999).

11. S. V. Gonchenko and L. P. Shilnikov, "On Two-Dimensional Analytic Area-Preserving Diffeomorphisms with a Countable Set of Stable Elliptic Periodic Points," Regul. Khaoticheskaya Dinamika **2** (3/4), 106–123 (1997).
12. S. V. Gonchenko and L. P. Shilnikov, "Arithmetic Properties of Topological Invariants of Systems with Structurally Unstable Homoclinic Trajectories," Ukr. Mat. Zh. **39** (1), 21–28 (1987) [Ukr. Math. J. **39**, 15–21 (1987)].
13. S. V. Gonchenko and L. P. Shilnikov, "On Geometrical Properties of Two-Dimensional Diffeomorphisms with Homoclinic Tangencies," Int. J. Bifurcation Chaos Appl. Sci. Eng. **5** (3), 819–829 (1995).
14. S. E. Newhouse, "Quasi-Elliptic Periodic Points in Conservative Dynamical Systems," Am. J. Math. **99**, 1061–1087 (1977).
15. L. Mora and N. Romero, "Moser's Invariant Curves and Homoclinic Bifurcations," Dyn. Syst. Appl. **6**, 29–42 (1997).
16. P. Duarte, "Plenty of Elliptic Islands for the Standard Family of Area Preserving Maps," Ann. Inst. Henri Poincare **11** (4), 359–409 (1994).
17. P. Duarte, "Abundance of Elliptic Isles at Conservative Bifurcations," Preprint No. 7/98 (Lisbon, 1998).
18. S. V. Gonchenko, L. P. Shilnikov, and D. V. Turaev, "Elliptic Periodic Orbits near a Homoclinic Tangency in Four-Dimensional Symplectic Maps and Hamiltonian Systems with Three Degrees of Freedom," Regular and Chaotic Dynamics **3** (4), 3–26 (1998).
19. S. V. Gonchenko, "Moduli of Systems with Non-Rough Homoclinic Orbits (the Cases of Diffeomorphisms and Vector Fields)," in *Methods of the Qualitative Theory of Differential Equations* (Gor'kovsk. Gos. Univ., Gorki, 1989), pp. 34–49 [Sel. Math. Sov. **11** (4), 393–404 (1992)].
20. S. V. Gonchenko and L. P. Shilnikov, "Invariants of $\Omega$-Conjugacy of Diffeomorphisms with a Nongeneric Homoclinic Trajectory," Ukr. Mat. Zh. **42** (2), 153–159 (1990) [Ukr. Math. J. **42** (2), 134–140 (1990)].
21. S. V. Gonchenko and L. P. Shilnikov, "On Moduli of Systems with a Structurally Unstable Homoclinic Poincaré Curve," Izv. Ross. Akad. Nauk, Ser. Mat. **56** (6), 1165–1196 (1992) [Izv. Math. **41** (3), 417–445 (1993)].
22. S. V. Gonchenko, "Dynamics and Moduli of $\Omega$-Conjugacy of 4D-Diffeomorphisms with a Structurally Unstable Homoclinic Orbit to a Saddle–Focus Fixed Point," in *Methods of Qualitative Theory of Differential Equations and Related Topics* (Am. Math. Soc., Providence, 2000), Am. Math. Soc. Transl., Ser. 2, **200**, pp. 107–134.
23. S. V. Gonchenko and L. P. Shilnikov, "On Dynamical Systems with Structurally Unstable Homoclinic Curves," Dokl. Akad. Nauk SSSR **286** (5), 1049–1053 (1986) [Sov. Math. Dokl. **33**, 234–238 (1986)].
24. S. V. Gonchenko and L. P. Shilnikov, "Hyperbolic Properties of Four-Dimensional Symplectic Mappings with a Structurally Unstable Trajectory Homoclinic to a Fixed Point of the Saddle–Focus Type," Diff. Uravn. **36** (11), 1464–1474 (2000) [Diff. Eqns. **36** (11), 1610–1620 (2000)].
25. L. P. Shilnikov, "On the Structure of the Neighborhood of a Homoclinic Tube of an Invariant Torus," Dokl. Akad. Nauk SSSR **180** (2), 286–289 (1968) [Sov. Math. Dokl. **9**, 624–628 (1968)].
26. V. S. Afraimovich and L. P. Shilnikov, "On Critical Sets of Morse–Smale Systems," Tr. Mosk. Mat. Obshch. **28**, 181–214 (1973).
27. V. I. Arnold, *Mathematical Methods of Classical Mechanics* (Nauka, Moscow, 1974) [in Russian].

*Translated by the authors*